Owner's Manual

Original Instructions

Air Conditioners

DC Inverter U-match Series Duct Type Unit

Models:

Indoor Unit	Outdoor Unit
CH-IDS035PRK2	CH-IU035RK2
CH-IDS050PRK2	CH-IU050RK2
CH-IDS071PRK2	CH-IU071RK2
CH-IDS085PRK2	CH-IU085RK2
CH-IDH100PRK2	CH-IU100RM2
CH-IDH125PRK2	CH-IU125RM2
CH-IDH140PRK2	CH-IU140RM2
CH-IDH160PRK2	CH-IU160RM2

To Users

Thank you for selecting C&H product. Please read this instruction manual carefully before installing and using the product, so as to master and correctly use the product. In order to guide you to correctly install and use our product and achieve expected operating effect, we hereby instruct as below:

(1) This appliance can be used by children aged from 8 years and above and persons with reduced physical, sensory or mental capabilities or lack of experience and knowledge if they have been given supervision or instruction concerning use of the appliance in a safe way and understand the hazards involved. Children shall not play with the appliance. Cleaning and user maintenance shall not be made by children without supervision.

(2) In order to ensure reliability of product, the product may consume some power under stand-by status for maintaining normal communication of system and preheating refrigerant and lubricant. If the product is not to be used for long, cut off the power supply; please energize and preheat the unit in advance before reusing it.

(3) Please properly select the model according to actual using environment, otherwise it may impact the using convenience.

(4) If the product needs to be installed, moved or maintained, please contact our designated dealer or local service center for professional support. Users should not disassemble or maintain the unit by themselves, otherwise it may cause relative damage, and our company will bear no responsibilities.

(5) All the illustrations and information in the instruction manual are only for reference. In order to make the product better, we will continuously conduct improvement and innovation. If there is adjustment in the product, please subject to actual product.

(6) If the supply cord is damaged, it must be replaced by the manufacturer, its service agent or similarly qualified persons in order to avoid a hazard.

Exception Clauses

Manufacturer will bear no responsibilities when personal injury or property loss is caused by the following reasons:

(1) Damage the product due to improper use or misuse of the product.

(2) Alter, change, maintain or use the product with other equipment without abiding by the instruction manual of manufacturer.

(3) After verification, the defect of product is directly caused by corrosive gas.

(4) After verification, defects are due to improper operation during transportation of product.

(5) Operate, repair, maintain the unit without abiding by instruction manual or related regulations.

(6) After verification, the problem or dispute is caused by the quality specification or performance of parts and components that produced by other manufacturers.

(7) The damage is caused by natural calamities, bad using environment or force majeure.

Contents

1 Safety Notice (Please be sure to abide them) 1

2 Installation 5

2.1 Installation Preparation 5

2.2 Unit Installation 14

2.3 Electrical Installation 35

2.4 Check after Installation.....46

2.5 Product Operating Range 46

2.6 Test Running 46

3 Product Introduction 48

3.1 Overall Layout.....48

3.2 Standard Accessories.....49

4 Installation of Controller 50

5 Maintenance 50

5.1 Failures Not Caused by Faults of the AC.....50

5.2 Error Code 53

5.3 Unit Maintenance 56

5.4 Notice on Maintenance 57

5.5 After-sales Services 64

This marking indicates that this product should not be disposed with other household wastes throughout the EU. To prevent possible harm to the environment or human health from uncontrolled waste disposal, recycle it responsibly to promote the sustainable reuse of material resources. To return your used device, please use the return and collection systems or contact the retailer where the product was purchased. They can take this product for environmental safe recycling.

1 Safety Notice (Please be sure to abide them)

SPECIAL WARNING:

(1) Be sure to comply with national gas regulations.

(2) Do not pierce or burn.

(3) Do not use means to accelerate the defrosting process or to clean, other than those recommended by the manufacturer.

(4) Be aware that refrigerants may not contain an odor.

(5) Appliance shall be installed, operated and stored in a room with a floor area larger than “X” m^2 (“X” see section 2.1.1).

(6) The appliance shall be stored in a room without continuously operating ignition sources (for example: open flames, an operating gas appliance or an operating electric heater).

PROHIBITED: This sign indicates that the items must be prohibited. Improper operation may cause severe damage or death to people.

WARNING: If not abide them strictly, it may cause severe damage to the unit or the people.

NOTE: If not abide them strictly, it may cause slight or medium damage to the unit or the people.

OBSERVED: This sign indicates that the items must be observed. Improper operation may cause damage to people or property.

WARNING:

This product can’t be installed at corrosive, inflammable or explosive environment or the place with special requirements, such as kitchen. Otherwise, it will affect the normal operation or shorten the service life of the unit, or even cause fire hazard or serious injury. As for the above special places, please adopt special air conditioner with anti-corrosive or anti-explosion function.

Please read this operating manual carefully before operating the unit.

The air conditioner is charged with inflammable refrigerant R32 (GWP: 675).

Before using the air conditioner, please read the instruction manual.

Before installing the air conditioner, please read the instruction manual.

Before repairing the air conditioner, please read the instruction manual.

The figures in this manual may be different with the material objects, please refer to the material objects for reference.

PROHIBITED!	
(1)	The air conditioner should be grounded to avoid electric shock. Do not connect the ground wire to gas pipe, water pipe, lightning arrester or telephone wire.
(2)	The appliance shall be stored in a well-ventilated area where the room size corresponds to the room area as specified for operation.
(3)	The appliance shall be stored in a room without continuously operating open flames (for example an operating gas appliance) and ignition sources (for example an operating electric heater).
(4)	According to federal/state/local laws and regulations, all packages and transportation materials, including nails, metal or wooden parts, and plastic packing material, must be treated in a safe way.

WARNING!	
(1)	Please install according to this instruction manual. Installation must be performed in accordance with the requirement of NEC and CEC by authorized personnel only.
(2)	Any person who is involved with working on or breaking into a refrigerant circuit should hold a current valid certificate from an industry-accredited assessment authority, which authorises their competence to handle refrigerants safely in accordance with an industry recognised assessment specification.
(3)	Servicing shall only be performed as recommended by the equipment manufacturer. Maintenance and repair requiring the assistance of other skilled personnel shall be carried out under the supervision of the person competent in the use of flammable refrigerants.
(4)	The appliance shall be installed in accordance with national wiring regulations.
(5)	The fixed wires connecting to the appliance must be configured with all-pole disconnection device under voltage grade III according to wiring rules.

WARNING!	
(6)	Air conditioner should be stored with protective measures against mechanical damage caused by accident.
(7)	If the installation space for air conditioner pipe is too small, adopt a protective measure to prevent the pipe from physical damage.
(8)	During installation, use the specialized accessories and components, otherwise water leakage, electric shock or fire hazard may occur.
(9)	Please install the air conditioner in a secure place that can withstand the weight of air conditioner. Insecure installation may cause the air conditioner falling down and lead to injury.
(10)	Be sure to adopt independent power circuit. If the power cord is damaged, it must be repaired by the manufacturer, service agent or other professional agents.
(11)	The air conditioner can be cleaned only after it is turned off and power-disconnected, otherwise electric shock may occur.
(12)	The air conditioner is not intended to be cleaned or maintained by children without supervision.
(13)	Do not alter the setting of pressure sensor or other protective devices. If the protective devices are short-circuited or changed against rules, fire hazard or even explosion may occur.
(14)	Do not operate the air conditioner with wet hands. Do not wash or sprinkle water on the air conditioner, otherwise malfunction or electric shock will occur.
(15)	Do not dry the filter with naked flame or an air blower; otherwise the filter will be out of shape.
(16)	If the unit is to be installed in a small space, please adopt protective measures to prevent the concentration of refrigerant from exceeding the allowable safety limit; excessive refrigerant leakage may lead to explosion.
(17)	When installing or re-installing the air conditioner, please keep the refrigerant circuit away from substances other than the specified refrigerant, such as air. Any presence of foreign substances will cause abnormal pressure change or even explosion, resulting in injury.
(18)	Only professionals are allowed to carry on daily maintenance.
(19)	Before contacting any wire, make sure power is cut off.
(20)	Do not let any inflammable objects near the unit.
(21)	Do not use organic solvent to clean the air conditioner.
(22)	If you need to replace a component, please ask a professional to repair with a component supplied by the original manufacturer so as to ensure the unit's quality.
(23)	Improper operation may get the unit broken, hit by electric shock or cause fire.

WARNING!	
(24)	Do not make the air conditioner wet or electric shock may be lead, ensure that the air conditioner will not be cleaned by water rinsing under any circumstance.
(25)	When you do not connect the duct, you need to provide an extra protective net to avoid touching the basic insulation.

NOTES!	
(1)	Do not put a finger or other objects into the air inlet or air return grill.
(2)	Please adopt safety protection measures before touching the refrigerant pipe; otherwise your hands may be hurt.
(3)	Please arrange the drain pipe according to the instruction manual.
(4)	Never stop the air conditioner by directly cutting off the power.
(5)	Please select the proper copper pipe according to the requirement for pipe thickness.
(6)	Indoor unit can only be installed indoors while outdoor unit can be installed either indoors or outdoors. Never install the air conditioner in the following places: 1) Places with oil smoke or volatile liquid: plastic parts may deteriorate and fall off or even cause water leakage. 2) Places with corrosive gas: copper pipe or the welding parts may be corroded and cause refrigerant leakage.
(7)	Adopt proper measures to protect the outdoor unit from small animals because they may damage the electric components and cause malfunction of the air conditioner.
(8)	Before cleaning, please make sure the unit is stopped. Cut the circuit breaker and remove the power socket, otherwise, electric shock may occur.
(9)	Do not wash the air conditioner with water, otherwise fire hazard or electric shock may occur.
(10)	When cleaning the filter, please be careful of your steps. If you need to work high above the ground, please be extremely careful.

OBSERVED!	
(1)	If wired control is to be used, it should be connected first before powering up the unit, otherwise the wired control may not be able to use.
(2)	When installing the indoor unit, keep it away from television, wireless waves, and fluorescent.
(3)	Only use soft dry cloth or slightly wet cloth with neutral detergent to clean the casing of the air conditioner.
(4)	Before operating the unit under low temperature, connect it to power for 8 hours. If it is stopped for a short time, for example, one night, do not cut off the power (This is to protect the compressor).

2 Installation

2.1 Installation Preparation

2.1.1 Notice on Installation

(1) Notice on Refrigerant Concentration before Installation.

This air conditioner uses R32 refrigerant. The construction area for installation, operation and storage of the air conditioner must be larger than the minimum construction area. The minimum area for installation is determined by:

1) Refrigerant charging quantity for the entire system (ex-factory charging quantity + additional charging quantity).
2) Checking out in the applicable tables:
   A. For indoor unit, confirm the model of indoor unit and check the corresponding table.
   B. For outdoor unit that is installed or placed indoors, select the corresponding table according to the height of the room.

Height of the room	Select the applicable table
<1.8m	Floor standing type
≥1.8m	Wall mounted type

3) Refer to the following table to check out the minimum construction area.

Ceiling type		Wall mounted type		Floor standing type	
Weight (kg)	Area (m²)	Weight (kg)	Area (m²)	Weight (kg)	Area (m²)
<1.224	—	<1.224	—	<1.224	—
1.224	0.956	1.224	1.43	1.224	12.9
1.4	1.25	1.4	1.87	1.4	16.8
1.6	1.63	1.6	2.44	1.6	22.0
1.8	2.07	1.8	3.09	1.8	27.8
2.0	2.55	2.0	3.81	2.0	34.3
2.2	3.09	2.2	4.61	2.2	41.5
2.4	3.68	2.4	5.49	2.4	49.4
2.6	4.31	2.6	6.44	2.6	58.0
2.8	5.00	2.8	7.47	2.8	67.3
3.0	5.74	3.0	8.58	3.0	77.2

Ceiling type		Wall mounted type		Floor standing type	
Weight (kg)	Area (m²)	Weight (kg)	Area (m²)	Weight (kg)	Area (m²)
3.2	6.54	3.2	9.76	3.2	87.9
3.4	7.38	3.4	11.0	3.4	99.2
3.6	8.27	3.6	12.4	3.6	111
3.8	9.22	3.8	13.8	3.8	124
4.0	10.2	4.0	15.3	4.0	137
4.2	11.3	4.2	16.8	4.2	151
4.4	12.4	4.4	18.5	4.4	166
4.6	13.5	4.6	20.2	4.6	182
4.8	14.7	4.8	22.0	4.8	198
5.0	16.0	5.0	23.8	5.0	215
5.2	17.3	5.2	25.8	5.2	232
5.4	18.6	5.4	27.8	5.4	250
5.6	20.0	5.6	29.9	5.6	269
5.8	21.5	5.8	32.1	5.8	289
6.0	23.0	6.0	34.3	6.0	309
6.2	24.5	6.2	36.6	6.2	330
6.4	26.1	6.4	39.1	6.4	351
6.6	27.8	6.6	41.5	6.6	374
6.8	29.5	6.8	44.1	6.8	397
7.0	31.3	7.0	46.7	7.0	420
7.2	33.1	7.2	49.4	7.2	445
7.4	34.9	7.4	52.2	7.4	470
7.6	36.9	7.6	55.1	7.6	496
7.8	38.8	7.8	58.0	7.8	522
8.0	40.8	8.0	61.0	8.0	549

(2) When installing an outdoor unit with single or double fans, hold the handle and then lift it up slowly (Do not touch the condenser with your hand or other objects). If you hold only one side of the casing, the casing may be pulled out of shape, so please hold the base of the unit as well. During installation, be sure to use the components specified in the instruction manual.

(3) Please use the charging machine specialized for R32 refrigerant before charging, keep the refrigerant tank in an upright position. After charging, stick a label on the air conditioner saying no excessive charging.

(4) The following tools will be used: 1) Liquid-level gauge; 2) Screwdriver; 3) Electric driven rotary hammer; 4) Drill; 5) Pipe expander; 6) Torque wrench; 7) Open-end wrench; 8) Pipe cutter; 9) Leak detector; 10) Vacuum pump; 11) Pressure gauge; 12) Universal meter; 13) Hexagon wrench; 14) Tapeline.

2.1.2 Selection of Installation Location

WARNING!
(1) If the outdoor unit will be exposed in strong wind, it must be securely located, otherwise it may fall down.
(2) Install the air conditioner at a place where the inclination is less than 5°.
(3) Do not install the unit at a place with direct sunlight.
(4) Do not install the unit at a place with leakage of inflammable gas.

Selection of Installation Location for Indoor Unit (Select a location pursuant to the following condition).

(1) Air inlet and outlet of the indoor unit should be away from obstacles to make sure the unit's air flow can reach the entire room. Do not install the unit in a kitchen or a laundry.

(2) Install the unit in a room without naked flame, fire source or the risk of getting the refrigerant on fire.

(3) Select a location that can withstand 4 times the unit weight without increasing operating noise and vibration.

(4) The installation location must be level.

(5) The indoor piping length and wiring length should be within the allowable range.

(6) Select a place that can easily drain condensate and connect to the drain system of the air conditioner.

(7) If hoisting screw bolts are to be used, check whether the installation location is safe enough. If not safe, reinforce the location before installation.

(8) Indoor unit, power cord, connecting wires and communication cords should be at least 1m from television and radio. This is to prevent image interference or noise (Even at a distance of 1m, a very strong electric wave may still generate noise).

Selection of Installation Location for Outdoor Unit (Select a location pursuant to the following condition).

(1) Noise and air flow produced by the outdoor unit will not disturb the neighbors.

(2) Select a location that is safe and away from animals and plants. If not, please add safety fences to protect the unit.

(3) Install at a place with good ventilation. Make sure the outdoor unit stays at a well-ventilated place with no obstacles nearby that may obstruct the air inlet and outlet.

(4) The installation location should be able to withstand the weight and vibration of outdoor unit and allow the installation to be carried out safely.

(5) Avoid installing at a place with leakage of inflammable gas, oil smoke or corrosive gas.

(6) Keep it away from strong wind because strong wind will affect the outdoor fan and lead to insufficient air flow volume and thus affecting the unit's performance.

(7) Install the outdoor unit at a place that is convenient for it to be connected to the indoor unit.

(8) Away from any object that may get the air conditioner generating noise.

(9) Install the outdoor unit at a place where condensate can be easily drained.

2.1.3 Unit Dimension

WARNING!	
(1)	Install the indoor unit in a location which can withstand a load of at least five times the weight of the main unit and which will not amplify sound or vibration.
(2)	If the installation location is not strong enough, the indoor unit may fall and cause injuries.
(3)	If the job is done with the panel frame only, there is a risk that the unit will come loose. Please take care.

(1) Indoor Unit

CH-IDS035PRK2,CH-IDS050PRK2,

CH-IDH140PRK2, CH-IDH160PRK2

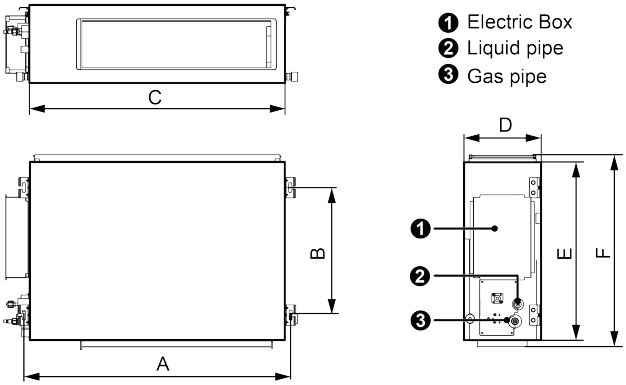

CH-IDS071PRK2,CH-IDS085PRK2

CH-IDH100PRK2,CH-IDH125PRK2.

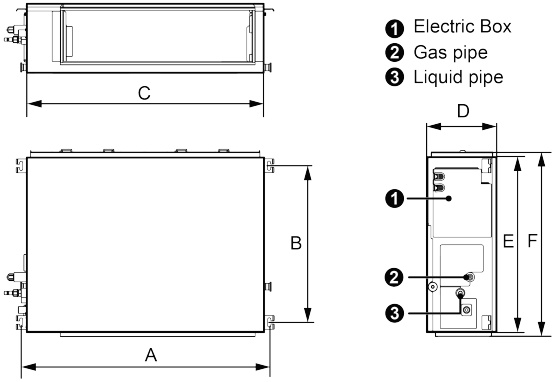

Unit: mm

Dimensions / Model	A	B	C	D	E	F
CH-IDS035PRK2	760	415	700	200	450	486
CH-IDS050PRK2	1060	415	1000	200	450	486
CH-IDS071PRK2	942	590	900	260	655	692

Dimensions / Model	A	B	C	D	E	F
CH-IDS085PRK2	942	590	900	260	655	692
CH-IDH100PRK2	1381	585	1340	260	655	697
CH-IDH125PRK2	1381	585	1340	260	655	697
CH-IDH140PRK2	1440	500	1400	300	700	754
CH-IDH160PRK2	1440	500	1400	300	700	754

NOTE!

Drilling of ceiling opening and installation of air conditioner must be performed by professionals!

(2) Outdoor Unit

CH-IU035RK2,CH-IU050RK2,CH-IU071RK2, CH-IU085RK2,

CH-IU100RM2,CH-IU125RM2, CH-IU140RM2, CH-IU160RM2

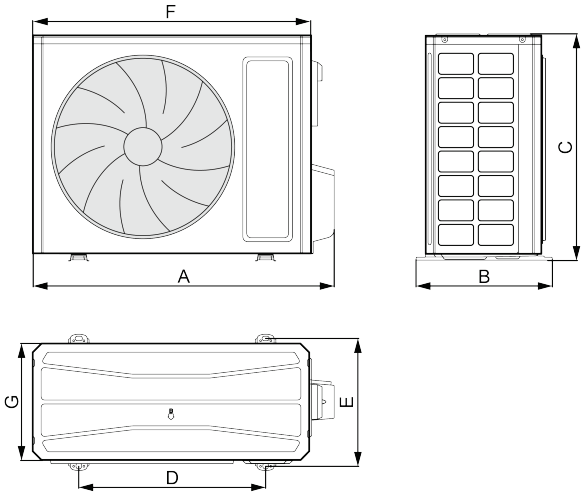

Unit: mm

Dimensions / Model	A	B	C	D	E	F	G
CH-IU035RK2	732	330	553	455	310	675	285
CH-IU050RK2	802	350	555	512	331	745	300
CH-IU071RK2	958	402	660	570	371	889	340
CH-IU085RK2	958	402	660	570	371	889	340
CH-IU100RM2	1020	427	820	635	396	940	370
CH-IU125RM2	1020	427	820	635	396	940	370
CH-IU140RM2	1020	427	820	635	396	940	370
CH-IU160RM2	1070	427	960	755	396	990	370

2.1.4 Diagram of Unit Installation Space and Location

(1) Diagram of installation space and location for outdoor unit (Notice: for best performance of the outdoor unit, make sure its installation space conforms to the following installation dimensions).

1) When one outdoor unit is to be installed.

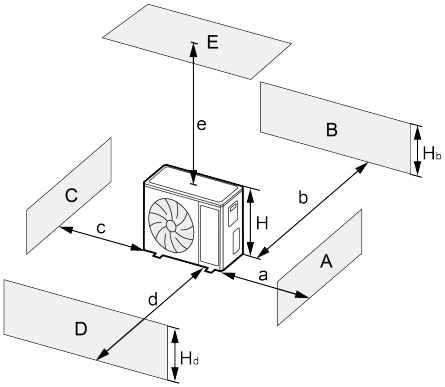

A~E	H_b H_d H	(mm)				
		a	b	c	d	e
B	—	—	≥100	—	—	—
A,B,C,	—	≥300	≥100	≥100	—	—
B,E	—	—	≥100	—	—	≥1000

A~E	H_b H_d H		(mm)				
			a	b	c	d	e
A,B,C,E	—		≥300	≥150	≥150	—	≥1000
D	—		—	—	—	≥1000	—
D,E	—		—	—	—	≥1000	≥1000
B,D	$H_b<H_d$	$H_d>H$	—	≥100	—	≥1000	—
	$H_b>H_d$	$H_d<H$	—	≥100	—	≥1000	—
B,D,E	$H_b<H_d$	$H_b≤1/2H$	—	≥250	—	≥2000	≥1000
		$1/2H<H_b≤H$	—	≥250	—	≥2000	≥1000
		$H_b>H$	Prohibited				
	$H_b>H_d$	$H_d≤1/2H$	—	≥100	—	≥2000	≥1000
		$1/2H<H_d≤H$	—	≥200	—	≥2000	≥1000
		$H_d>H$	Prohibited				

2) When two or more outdoor units are to be installed side by side.

Unit: mm

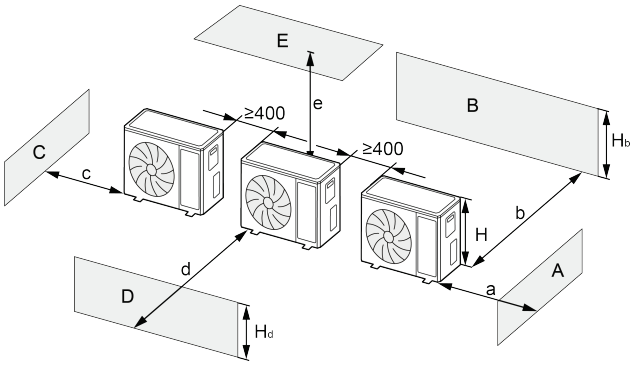

A~E	H_b H_d H		(mm)				
			a	b	c	d	e
A,B,C	—		≥300	≥300	≥1000	—	—
A,B,C,E	—		≥300	≥300	≥1000	—	≥1000
D	—		—	—	—	≥2000	—
D,E	—		—	—	—	≥2000	≥1000
B,D	$H_b<H_d$	$H_d>H$	—	≥300	—	≥2000	—
	$H_b>H_d$	$H_d≤1/2H$	—	≥250	—	≥2000	—
		$1/2H<H_d≤H$	—	≥300	—	≥2500	—

A~E	H_b H_d H		(mm)				
			a	b	c	d	e
B,D,E	$H_b<H_d$	$H_b \le 1/2H$	—	≥300	—	≥2000	≥1000
		$1/2H<H_b \le H$	—	≥300	—	≥2500	≥1000
		$H_b>H$	Prohibited				
	$H_b>H_d$	$H_d \le 1/2H$	—	≥250	—	≥2500	≥1000
		$1/2H<H_d \le H$	—	≥300	—	≥2500	≥1000
		$H_d>H$	Prohibited				

3) When outdoor units are installed in rows.

Unit: mm

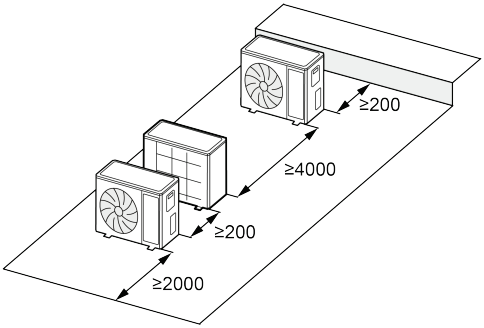

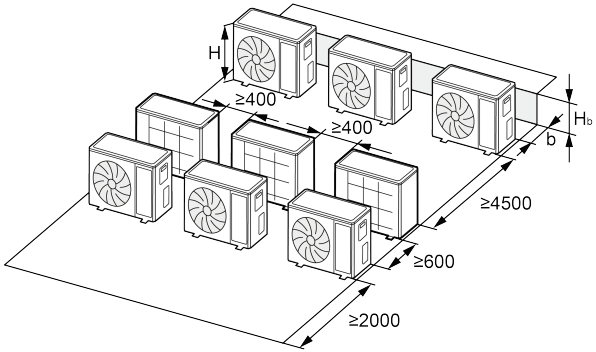

H_b H	(mm)
$H_b \le 1/2H$	b≥250
$1/2H<H_b \le H$	b≥300
$H_b>H$	Prohibited

4) When outdoor units are installed one above another.

Unit: mm

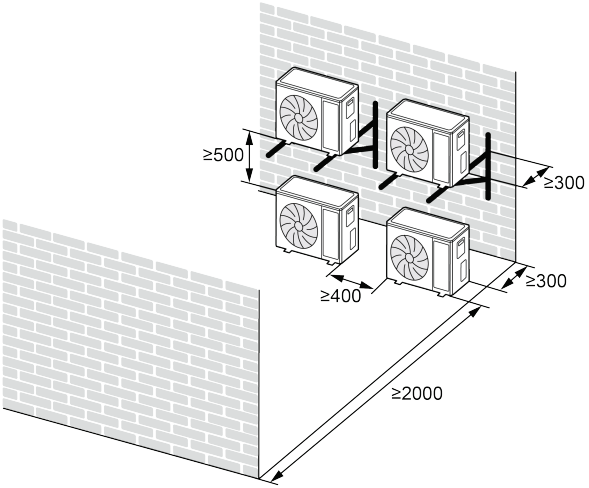

(2) Diagram of installation location and space for indoor unit (Notice: for the best performance of indoor unit, make sure its installation space conforms to the following installation dimensions).

Unit: mm

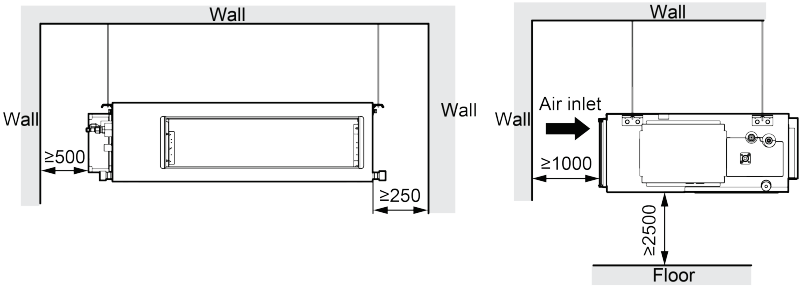

2.2 Unit Installation

2.2.1 Indoor Unit Installation

2.2.1.1 Preparation for Installing the Indoor Unit

NOTES!
(1) Please tighten the nut and bolt to prevent the air conditioner from falling down.
(2) The unit might be loose if fixing the panel rack only. Be careful during installation.

(1) Install the bolts to the ceiling at a place strong enough to hang the unit. Mark the bolt positions from the installation template. With a concrete drill for 12.7mm diameter holes. See the following figure.

Unit:mm

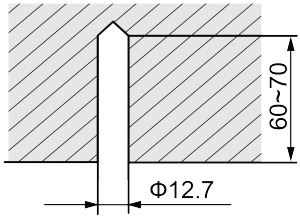

(2) Insert the anchor bolts into the drilled holes, and drive the pins completely into the anchor bolts with a hammer. See the following figure.

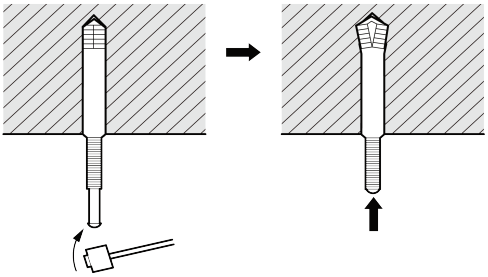

(3) Install the hanger to the unit. See the following figure.

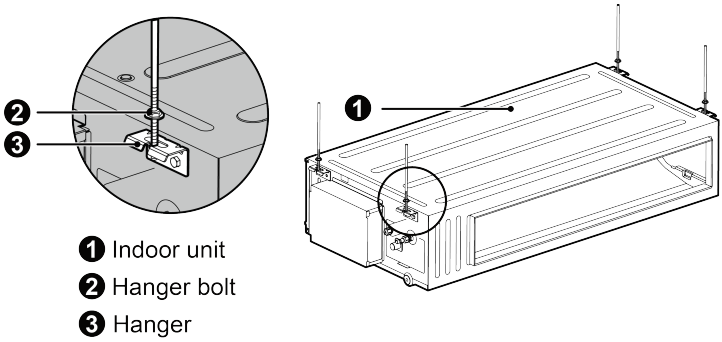

(4) Pass the unit hangers over the bolts installed to the ceiling and install the unit with the special nut. See the following figure.

Unit:mm

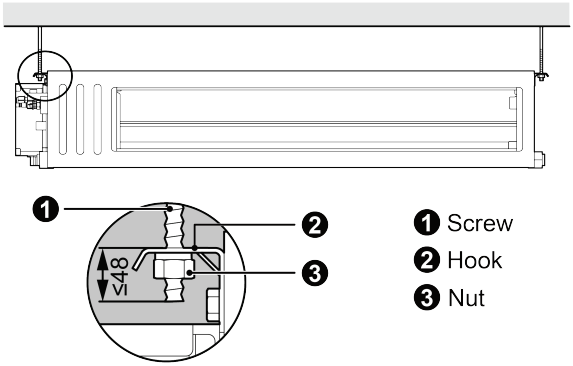

2.2.1.2 Leveling

After installing the indoor unit, level detection of the unit shall be conducted. Place the unit horizontally and leave the left and right side with a downward slope of 1/100~1/50 in drainage direction, as shown below.

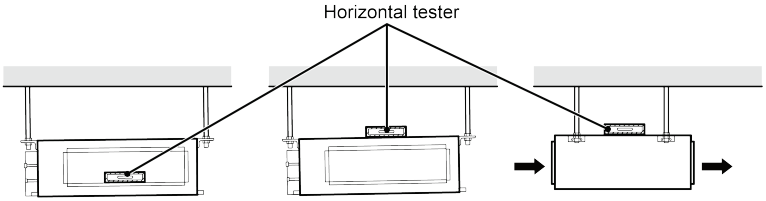

2.2.2 Outdoor Unit Installation

(1) If the outdoor unit is installed on a solid ground such as concrete, use M10 screw bolts and nuts to secure the unit and make sure the unit stands erect and level.

(2) Do not install it on top of the building.

(3) If it vibrates and causes noise, please add rubber cushion between the outdoor unit and the installation base.

(4) When the outdoor unit is in heating or defrosting, it needs to drain water. When installing the drain pipe, plug the accompanied drainage connector to the drainage hole on the chassis of the outdoor unit. Then connect a drain hose to the drainage connector (If drainage connector is used, the

outdoor unit should be at least 10cm from the installation ground). See the following figures.

(5) Plugs and drainage connector are not recommended if there is an electrical heater on the chassis.

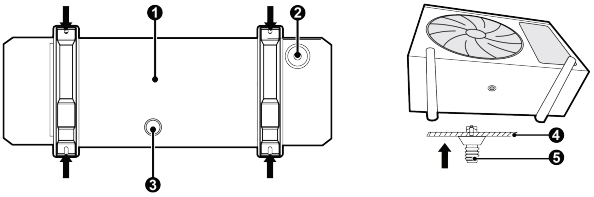

❶ Bottom
❷ Drain cap
❸ Drain pipe mounting hole
❹ Chassis
❺ Drain connection

2.2.3 Connection Pipe Installation

2.2.3.1 Installation Notice and Requirement on Connection Pipe

Installation of Ordinary Nut and Tamperproof box

Unfold the connecting pipe and bend the connecting pipe according to the required length. Open the nut cover on the indoor unit's pipe and align the conical mouth of the connecting pipe with the center of the indoor unit's pipe. Tighten the nut by hand and then tighten it with a torque wrench. The connecting pipe of indoor unit must be installed with the tamperproof box that is included in delivery. Once installed, the tamperproof box cannot be removed. If you need to break the connection between indoor and outdoor units, cut the connector. Replace with a new one and weld again.

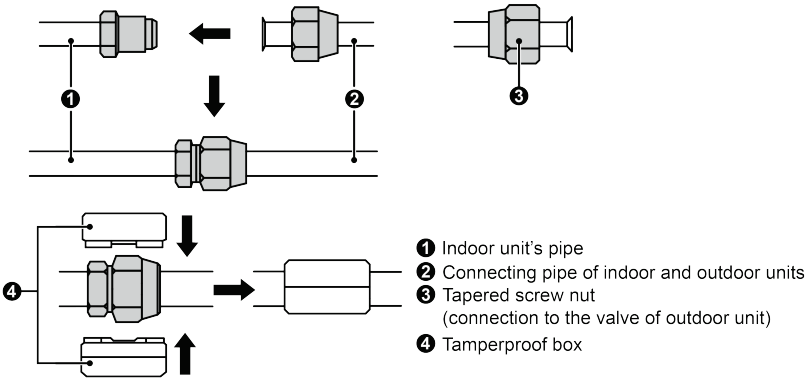

❶ Indoor unit's pipe
❷ Connecting pipe of indoor and outdoor units
❸ Tapered screw nut
(connection to the valve of outdoor unit)
❹ Tamperproof box

NOTES!	
(1)	The air conditioner must be installed in a room that is larger than the minimum room area. And it is not allowed to use in a room that has running fire.
(2)	Before break the connection pipes between indoor and outdoor units，eliminate the refrigerant first and make sure there is no fire source or potential fire source in the maintenance area. And make sure the area is well-ventilated.
(3)	The tamperproof box should not be overlapped during installation and must be completely covered with the accompanied insulated pipe before wrapping.

Installation method: Connect the connection pipes first to the indoor unit and then to the outdoor unit. When bending a connection pipe, be careful not to damage the pipe. Do not over-tighten the screw nut, otherwise leakage will occur. Besides, the outside of connection pipe should be added with a layer of insulating cotton to protect it from mechanical damage during installation, maintenance and transportation.

Item / Model	Size of Fitting Pipe(inch)		Maximum pipe length (m)	Biggest drop between indoor and outdoor units (m)
	Liquid pipe	Gas pipe		
CH-IDS035PRK2	Φ1/4	Φ3/8	30	15
CH-IDS050PRK2		Φ1/2	30	20
CH-IDS071PRK2	Φ3/8	Φ5/8	30	20
CH-IDS085PRK2			30	25
CH-IDH100PRK2			75	30
CH-IDH125PRK2			75	30
CH-IDH140PRK2			75	30
CH-IDH160PRK2			75	30

Connection pipe should adopt water-proof insulating material. Its wall thickness should be 0.5-1.0mm and the pipe wall should be able to withstand 6.0MPa. The longer the connection pipe is the worse cooling and heating performance it has.

When the drop between indoor and outdoor units is larger than 10m, an oil return bend should be added every 6m.

The requirement on the adding of oil return bend is as below:

(1) Outdoor unit is beneath the indoor unit.

There's no need to add non-return bend at the lowest or highest position of the vertical pipe, as shown below:

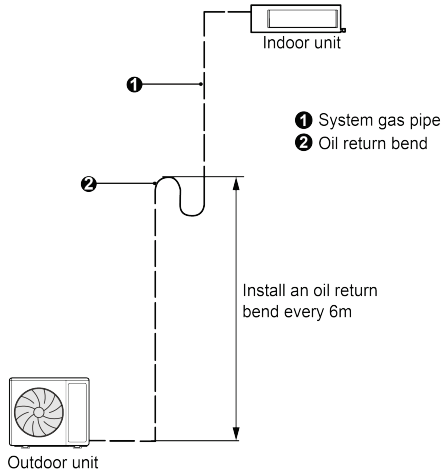

(2) Outdoor unit is above the indoor unit.

It's necessary to add oil return bend and non-return bend at the lowest and highest position of the vertical pipe, as shown below:

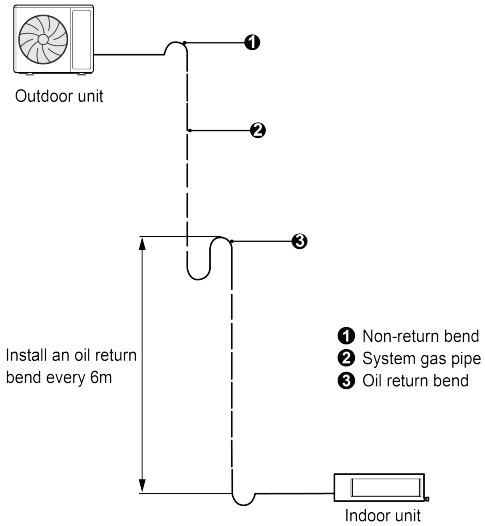

Dimensions for the making of oil return bend are as follows:

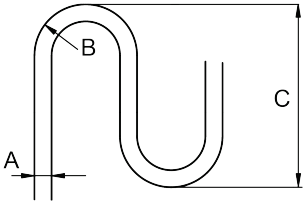

A(inch)	B(mm)	C(mm)
Φ3/8	≥20	≤150
Φ1/2	≥26	≤150
Φ5/8	≥33	≤150

2.2.3.2 Pipe Flaring

(1) Cut the connection pipe with a pipe cutter.

(2) The mouth of connection pipe should face downward. Remove burrs with the cut surface so that the chips do not enter the pipe.

(3) Remove the cut-off valve of outdoor unit and take out the flare nut from the bag of indoor unit accessories. Then fit the flare nut on the pipe and use a flaring tool to flare the mouth of connection pipe.

(4) Check whether the flaring part has cracked. (See the figure below)

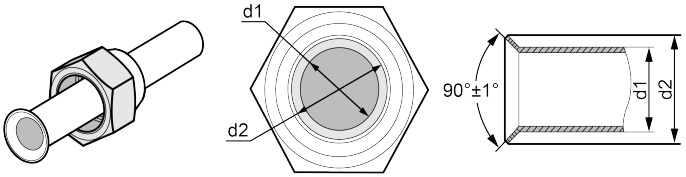

2.2.3.3 Pipe Bending

(1) The pipes are shaped by your hands. Be careful not to collapse them.

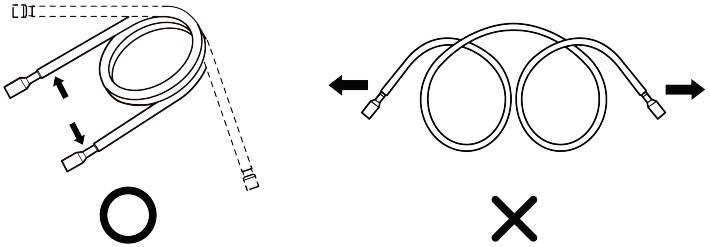

(2) Do not bend the pipes in an angle more than 90°.

(3) If the pipe is repeatedly bent or extended, it will become hard and difficult to be bent or extended. So do not bend or extend the pipe for more than 3 times.

(4) When bending the pipe, do not bend it excessively, otherwise it will get broken. As shown beside, use a sharp cutter to cut the heat insulating pipe and bend it after the pipe is exposed. After bending, place the heat insulating pipe back on the pipeline and fix it with adhesive tape.

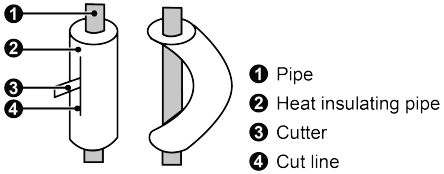

2.2.3.4 Connection Pipe of Indoor and Outdoor Units

NOTES!	
(1)	Connect the pipe to the unit. Please follow the instructions stated in the figures below. Use both spanner and torque wrench.
(2)	When connecting the tapered screw nut, first apply chilled machine oil on its inner and outer surface and then screw it up for 3~4 circles.
(3)	Confirm the tightening torque by referring to the following table (If the screw nut is over-twisted, it may be damaged and cause leakage).
(4)	Check whether gas leakage occurs to the connection pipe and then apply thermal insulation, as shown below.
(5)	Wind sponge around the joint of gas pipe and heat insulation sheath of gas collecting pipe.
(6)	Be sure to connect gas pipe after liquid pipe is connected.
(7)	The installation of pipe-work shall be kept to a minimum.
(8)	Pipe-work shall be protected from physical damage and shall not be installed in an unventilated space.

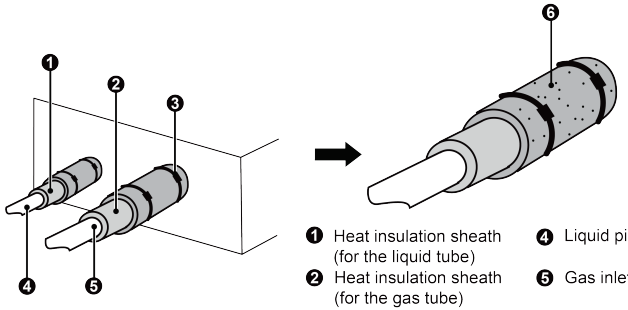

❶ Heat insulation sheath (for the liquid tube)
❷ Heat insulation sheath (for the gas tube)
❸ Threaded fastener(×4)
❹ Liquid pipe
❺ Gas inlet pipe
❻ Sponge

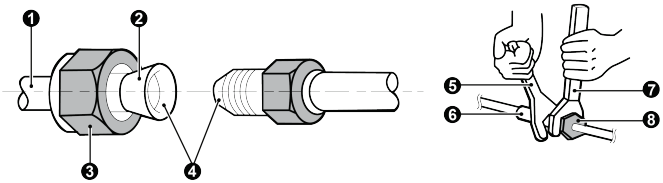

❶ Copper piping
❷ Oil applied
(To reduce friction with the flare nut)
❸ Flare nut
❹ Oil applied(Improves seal air-tightness)
❺ Spanner
❻ Piping union
❼ Torque wrench
❽ Flare nut

Pipe diameter (inch)	Tightening torque (N·m)
Φ1/4	15-30
Φ3/8	35-40
Φ1/2	45-50
Φ5/8	60-65
Φ3/4	70-75
Φ7/8	80-85

Screw on the flare nut of the flaring connecting pipe on the outdoor unit valve. The method of screwing the flare nut is the same with that for indoor unit.

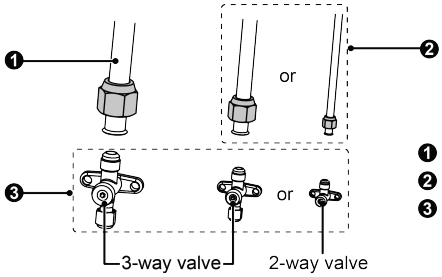

❶ Gas pipe
❷ Liquid pipe
❸ Pipe coupling

2.2.3.5 Thermal Insulation of Pipe Joint (Only for indoor unit)

Stick coupler heat insulation (large and small) to the place where connecting pipes.

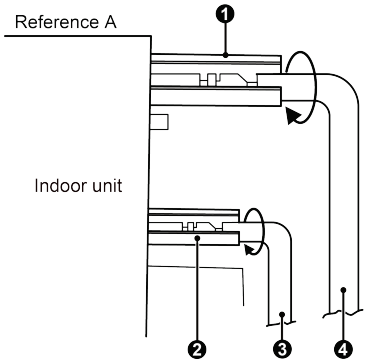

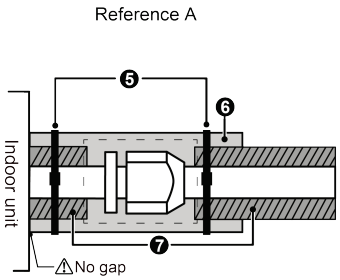

❶ Coupler heat insulation (large) on the pipe
❷ Coupler heat insulation (small) on the pipe
❸ Liquid pipe
❹ Gas pipe

❺ Threaded fastener
❻ Cover this portion with heat insulating material also without fail
❼ Heat insulation pipe

2.2.4 Connection Pipe Vacuum Pumping and Leak Detection

2.2.4.1 Vacuum Pumping

NOTE!
Make sure the outlet of vacuum pump is away from fire source and is well-ventilated.

(1) Remove the caps of the liquid valve, gas valve and also the service port.

(2) Connect the hose at the low pressure side of the manifold valve assembly to the service port of the unit's gas valve, and meanwhile the gas and liquid valves should be kept closed in case of refrigerant leak.

(3) Connect the hose used for evacuation to the vacuum pump.

(4) Open the switch at the lower pressure side of the manifold valve assembly and start the vacuum pump. Meanwhile, the switch at the high pressure side of the manifold valve assembly should be kept closed, otherwise evacuation would fail.

(5) The evacuation duration depends on the unit's capacity, generally.

Model	Time(min)
CH-IDS035PRK2 CH-IDS050PRK2	20
CH-IDS071PRK2 CH-IDS085PRK2 CH-IDH100PRK2	30
CH-IDH125PRK2 CH-IDH140PRK2 CH-IDH160PRK2	45

And verify if the pressure gauge at the low pressure side of the manifold valve assembly reads -0.1MPa (-750mmHg), if not, it indicates there is leak somewhere. Then, close the switch fully and then stop the vacuum pump.

(6) Wait for 10min to see if the system pressure can remain unchanged. If the pressure increase, there may be leakage.

(7) Slightly open the liquid valve and let some refrigerant go to the connection pipe to balance the pressure inside and outside of the connection pipe, so that air will not come into the connection pipe when removing the hose. Note that the gas and liquid valve can be opened fully only after the manifold valve assembly is removed.

(8) Place back the caps of the liquid valve, gas valve and also the service port.

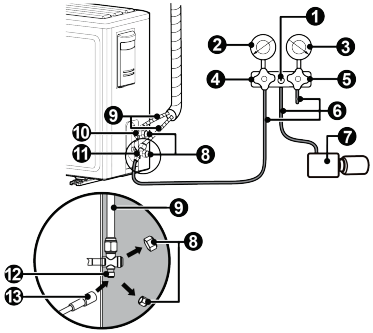

❶ Gauge manifold
❷ Pressure gauge (Low-pressure)
❸ Pressure gauge (High-pressure)
❹ Switch (Low-pressure)
❺ Switch (High-pressure)
❻ Hose
❼ Vacuum pump
❽ Cap
❾ Connection pipe
❿ Liquid valve
⓫ Gas valve
⓬ Service port
⓭ Hose with the valve pin

NOTE:

For large-size units, there are maintenance ports for liquid valve and gas valve. During evacuation, you may connect the two hoses of the branch valve assembly to the maintenance ports to speed up the evacuation.

2.2.4.2 Leak Detection Methods

The following leak detection methods are deemed acceptable for systems containing flammable refrigerants.

Electronic leak detectors shall be used to detect flammable refrigerants, but the sensitivity may not be adequate, or may need re-calibration (Detection equipment shall be calibrated in a refrigerant-free area).

Ensure that the detector is not a potential source of ignition and is suitable for the refrigerant used. Leak detection equipment shall be set at a percentage of the LFL of the refrigerant and shall be calibrated to the refrigerant employed and the appropriate percentage of gas (25% maximum) is confirmed.

Leak detection fluids are suitable for use with most refrigerants but the use of detergents containing chlorine shall be avoided as the chlorine may react with the refrigerant and corrode the copper pipe-work.

If a leak is suspected, all naked flames shall be removed / extinguished. If a leakage of refrigerant is found which requires brazing, all of the refrigerant shall be recovered from the system, or isolated (by means of shut off valves) in a part of the system remote from the leak. Oxygen free nitrogen (OFN) shall then be purged through the system both before and during the brazing process.

2.2.5 Refrigerant Adding

NOTE!
Before and during operation, use an appropriate refrigerant leak detector to monitor the operation area and make sure the technicians can be well aware of any potential or actual leakage of inflammable gas. Make sure the leak detecting device is applicable to inflammable refrigerant. For example, it should be free of sparks, completely sealed and safe in nature.

See the following table for the amount of additional refrigerant.

<table>
<tr><th>Item
Model</th><th>Standard Pipe Length</th><th>Unnecessary Charge Pipe Length</th><th>Additional Refrigerant Amount for Extra Pipe</th></tr>
<tr><td>CH-IU035RK2</td><td rowspan="6">5.0m</td><td rowspan="6">≤7.0m</td><td rowspan="2">16g/m</td></tr>
<tr><td>CH-IU050RK2</td></tr>
<tr><td>CH-IU071RK2</td><td rowspan="4">20g/m</td></tr>
<tr><td>CH-IU085RK2</td></tr>
<tr><td>CH-IU100RM2</td></tr>
<tr><td>CH-IU125RM2</td></tr>
<tr><td>CH-IU140RM2</td><td rowspan="2">7.5m</td><td rowspan="2">≤9.5m</td><td rowspan="2">35g/m</td></tr>
<tr><td>CH-IU160RM2</td></tr>
</table>

2.2.6 Installation of Drain Pipe

(1) It is not allowed to connect the condensate drain pipe into waste pipe or other pipelines which are likely to produce corrosive or peculiar smell to prevent the smell from entering indoors or corrupt the unit.

(2) It is not allowed to connect the condensate drain pipe into rain pipe to prevent rain water from pouring in and cause property loss or personal injury.

(3) Condensate drain pipe should be connected into special drain system for air conditioner.

2.2.6.1 Indoor Side Drain Pipe

NOTE!

Install the drain hose in accordance with the instructions in this installation manual and keep the area warm enough to prevent condensation. Problems with the piping may lead to water leaks.

(1) Install the drain hose with downward gradient (1/100 to 1/50) and no risers or traps are used for the hose. See the following figure.

(2) Be sure there is no crack or leak on the drain hose to avoid the formation of air pocket. See the following figure.

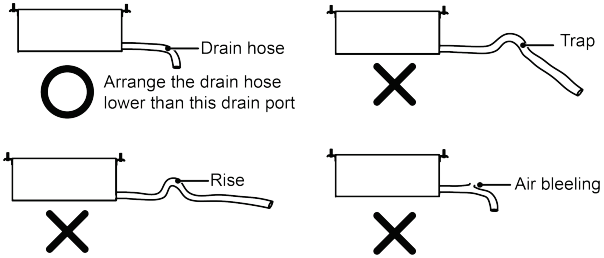

(3) When the hose is long, install supporters. See the following figure.

Unit: mm

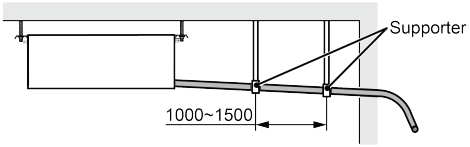

(4) Always use the drain hose which has been insulated properly.

(5) Use a suitable drain hose.

(6) There is a drain port on both the left and right sides. Select the drain port to match the local conditions. See the following figure.

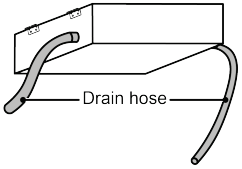

(7) When the unit is shipped from the factory, the drain port is defaulted to be the one on the left side (electric box side).

(8) When using the drain port on the right side of the unit, reinstall the drain cap to the left side drain port. See the following figure.

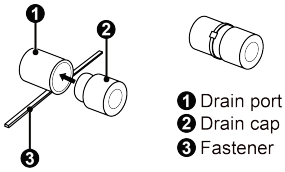

(9) Be sure to insulate where the drain port and the drain hose is connected. See the following figure.

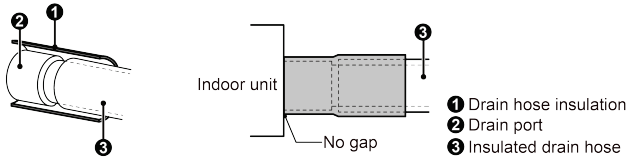

(10) The unused drain port also should be insulated properly. See the following figure.

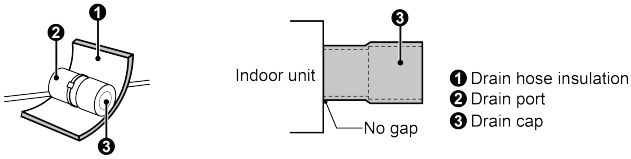

(11) There is adhesive on one side of the insulation so that after removing the protective paper over it the insulation can be directly attached to the drain hose.

2.2.6.2 Outdoor Side Drain Pipe

(1) If the outdoor unit is underneath the indoor unit, arrange the pipeline according to the following diagram.

1) Drain hose should be placed on the ground and its end should not be immersed into water. The whole pipeline should be supported and fixed onto the wall.
2) Wind the insulating tape from bottom to top.
3) The whole pipeline should be wound with insulating tape and fixed onto the wall with saddles.

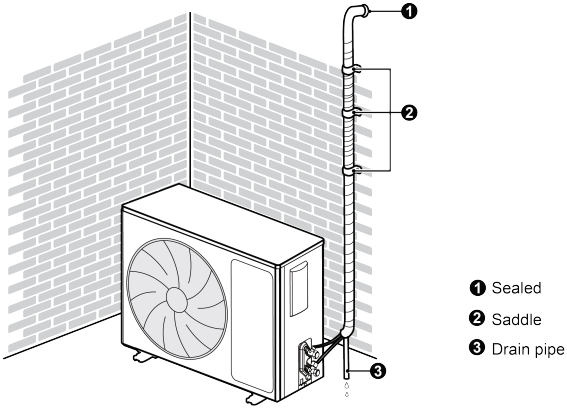

(2) If the outdoor unit is above the indoor unit, arrange the pipeline according to the following diagram.

1) Wind the insulating tape from bottom to top.
2) The whole pipeline should be wound together to avoid water returning to the room.
3) Use saddles to fix the whole pipeline onto the wall.

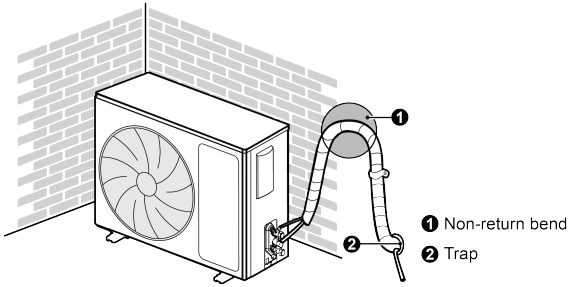

2.2.6.3 Drain Riser with Pump Unit Considerations

(1) For the unit with the condensate pump, only one drain port at the side close to the electric box is prepared and only through it the drain hose can be connected.

Item / Model	Drain pipe (inside dimension)(mm)
CH-IDS035PRK2	Φ26
CH-IDS050PRK2	
CH-IDS071PRK2	
CH-IDS085PRK2	
CH-IDH100PRK2	
CH-IDH125PRK2	
CH-IDH140PRK2	
CH-IDH160PRK2	

(2) For the unit with the condensate pump, two drain ports at the bottom are defaulted to be factory plugged with drain caps. After the installation of the drain hose, these two drain ports also need to be insulated properly with the same way aforementioned.

(3) The lifted installation height of drainage pipe is less than 1,000mm, as is shown in the following figure.

Unit: mm

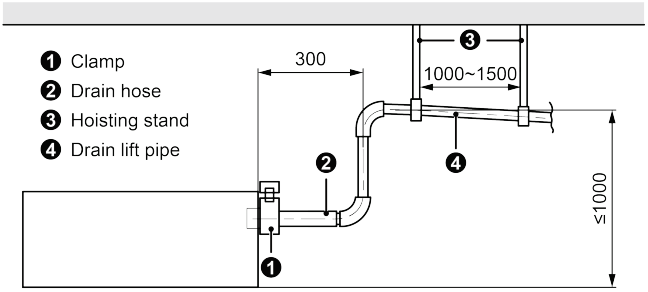

The vertical height of the drain hose should be 75mm or less so that it is unnecessary for the drain port to withstand additional force.

Unit: mm

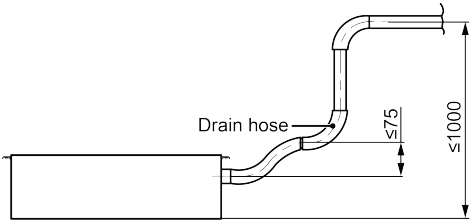

When multiple drain hoses are used, their installation should be performed as shown in the figure below.

Unit: mm

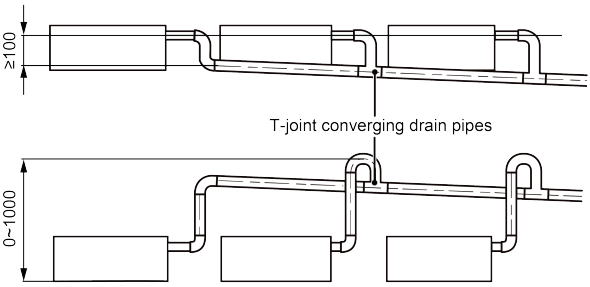

NOTE: The specification of the selected merged drainage pipe shall be appropriate for the operation capacity of the unit.

(4) Drain branch should be connected to the vertical or horizontal part of the main drain pipe.

(5) Horizontal pipe should not be connected to the vertical pipe that is on the same level. It should be connected in the following way:

1) Attach the 3-way connection of the drainage pipe joint.
2) Attach the drain elbow.
3) Attach the horizontal pipe.

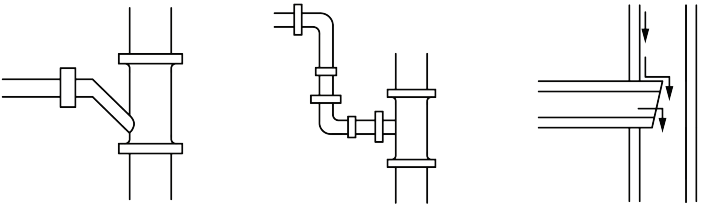

3-way connection of drainage pipe joint | Connection of drain elbow | Connection of horizontal pipe

2.2.6.4 Check Drainage

After piping work is finished, check if drainage flows smoothly.

As shown in the figure, add approximately 1liter of water slowly into the drain pan and check drainage flow during COOL running.

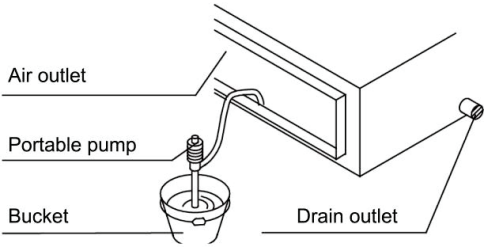

2.2.7 Installation of the Duct

2.2.7.1 Dimensions of the Supply Air Outlet/Return Air Inlet

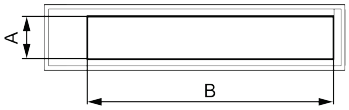

Supply Air Outlet

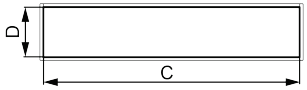

Return Air Inlet

Unit: mm

Item / Model	Supply Air Outlet		Return Air Inlet	
	A	B	C	D
CH-IDS035PRK2	122	585	700	200
CH-IDS050PRK2	122	885	1000	200
CH-IDS071PRK2	215	740	871	234
CH-IDS085PRK2	215	740	871	234
CH-IDH100PRK2	215	1153	1188	220
CH-IDH125PRK2	215	1153	1188	220
CH-IDH140PRK2	197	1151	1362	264
CH-IDH160PRK2	197	1151	1362	264

2.2.7.2 Return Air Method

(1) The default ex-factory return air method is from the back. The return air cover shall be installed at the bottom of the unit, as is shown in the following figure.

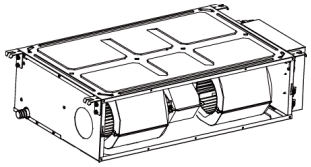

(2) If the downward return air method is adopted, then install the return air cover at the back of the unit after dismantling it.

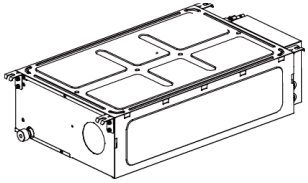

(3) Connect the return duct to the return air inlet of indoor unit with rivet, and the other side shall be connected to the return air inlet. For the convenience of free height adjustment, canvas duct can be made and reinforced with iron wire to a folding shape.

(4) The noise of downward return air is obvious bigger than that of rear return air. For downward return air, silencer and static pressure carton shall be added to conduct noise reduction treatment.

2.2.7.3 Installation of Supply Air Duct and Return Air Duct

Installation method shall be selected by entirely considering the conditions of buildings, maintenance, etc.as is shown in the following figure.

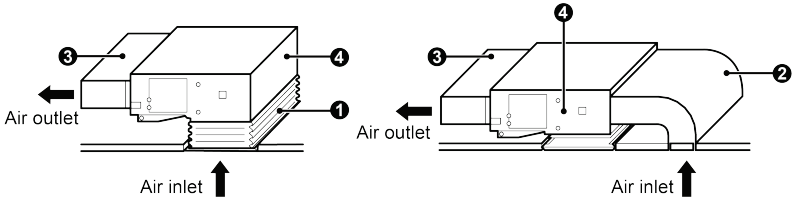

❶ Canvas duct
❷ Return air duct
❸ Supply air duct
❹ Indoor unit

NOTE:

The return air pipe must be connected to the air duct, and the internal components cannot be touched by hands after installation. During installation and maintenance of the unit, the disassembly must be done by the professionals.

2.2.7.4 Installation of Fresh Air Duct

(1) While connecting the fresh air duct, cut off the fresh air baffle plate as is shown in the following figure. If the fresh air duct is not used, block the gap of fresh air baffle plate with sponge.

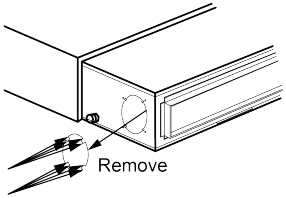

(2) Install the round flange so that it can be connected to the fresh air duct, as is shown in the following figure.

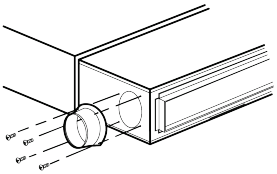

(3) The air duct and round flange duct shall be concealed and kept warm well.

(4) The fresh air is the air after filtration.

NOTES:

①. The supply air duct, return air duct and fresh air duct shall have thermal insulation layer to prevent heat leakage and condensation. Stick the plastic nail to the air duct, then attach the heat preservation cotton with tinfoil and fix it with plastic nail cover, finally, seal the connection joint with tinfoil tape tightly; other materials with good thermal insulation effect can also be used.

②. Each supply air duct and return air duct shall be fixed on the floor prefabricated slab with iron support; the air duct joint shall be tightly sealed with glue to prevent leakage.

③. The design and construction of air duct shall meet related national engineering specifications and requirements.

④. The distance between the edge of return air duct and wall is suggested to be above 150mm, add filter screen for the return air inlet.

⑤. Noise reduction and shock absorption shall be considered in air duct design and construction. Moreover, the noise source shall avoid the crowd, e.g. the return air inlet shall never be designed at the top of the user (office and rest area).

2.3 Electrical Installation

2.3.1 Requirement and Notice on Electrical Installation

WARNING:

The electrical installation for the air conditioner should observe the following requirements:

①. The electrical installation must be conducted by professionals in compliance with local laws and regulations and the instructions in this manual. Never extend the power cord. The electric circuit must be equipped with a circuit breaker and air switch both with sufficient capacity.

②. The unit's operating power must be within the nominal range stated in the instruction manual. Use a specialized power circuit for the air conditioner. Do not draw power from another power circuit.

③. The air conditioner circuit should be at least 1.5m away from any inflammable surface.

④. The external power cord, connection wire of indoor and outdoor units and the communication cords must be effectively fixed.

⑤. The external power cord, connection wire of indoor and outdoor units and the communication cords can't directly contact any hot objects. For example: they must not contact chimney pipes, warm gas pipes or other hot objects.

⑥. The external power cord, communication cords, and the connection wire of indoor and outdoor units must not be squeezed. Never pull, stretch or bend the wires.

⑦. The external power cord, communication cords and the connection wire of indoor and outdoor units must not collide with any metal beam or edge on the ceiling, or touch any metal burrs or sharp metal edge around.

⑧. Connect wires correspondingly by referring to the circuit diagram labeled on the unit or electric box. Screws must be tightened up. Slipped screws must be replaced by specialized flat-head screws.

⑨. Please use the power cables that are delivered along with the air conditioner. Do not change the power cables arbitrarily. Do not change the length and terminals of the power cables. If you want to change the power cables, please contact C&H's local service center.

⑩. Wiring terminals should be connected firmly to the terminal board. Loose connection is forbidden.

⑪. After the electrical installation is finished, please use wire clamps to secure the power cord, connection wire of indoor and outdoor units and the communication cords. Make sure the wires are not clamped too tight.

⑫. The wire gauge of power cord should be large enough. Damaged power cord or other wires must be replaced by specialized wires. Wiring work must be done according to national wiring rules and regulations.

2.3.2 Electrical Parameters

2.3.2.1 Wire Specifications and Fuse Capacity

Model	Power supply	Fuse capacity	Min. sectional area of power cord
	V/Ph/Hz	A	mm²
Indoor unit	220-240V ~50/60Hz	3.15	1.0

Model	Power supply	Circuit breaker capacity	Min. sectional area of power cord
	V/Ph/Hz	A	mm^2
CH-IU035RK2	220-240V ~50/60Hz	16	1.5
CH-IU050RK2		16	1.5
CH-IU071RK2		20	2.5
CH-IU085RK2		20	2.5
CH-IU100RM2	380-415V 3N~50/60Hz	16	1.5
CH-IU125RM2		16	1.5
CH-IU140RM2		16	1.5
CH-IU160RM2		16	1.5

NOTES:

①. Fuse is located on the main board.

②. Install a circuit breaker near the outdoor units with at least 3mm contact gap. The units must be able to be plugged or unplugged.

③. Circuit breaker and power cord specifications listed in the above table are determined based on the maximum power input of the units.

④. Supply cords of parts of appliances for outdoor use shall not be lighter than polychloroprene sheathed flexible cord (code designation 60245 IEC 57).

⑤. Specifications of circuit breaker are based on a working condition where the working temperature is 40°C. If working condition changes, please adjust the specifications according to national standards.

⑥. Adopt 1.0mm² power cords between indoor and outdoor units. The maximum length of 35-85 units is 30m and the maximum length of 100-160 units is 75m. Please select a proper length according to local conditions. To be in compliance EN 55014, it is necessary to use 8 meters long wire.

⑦. Adopt 2pc of 0.75mm² power cords to be the communication cords between wired controller and indoor unit. The maximum length is 30m. Please select a proper length according to local conditions. Communication cords must not be twisted together. To be in compliance EN 55014, it is necessary to use 8 meters long wire.

⑧. The wire gauge of communication cord should not be less than 0.75mm². It's recommended to use 0.75mm² power cords as the communication cords.

⑨. It's required to adopt the shielded wire for the communication cable between the indoor unit and the centralized controller; when connection is finished, the shielding layer should be reliably grounded.

2.3.3 Connection of Power Cord and Communication Cord

(1) For solid wires (as shown below):

1) Use wire cutters to cut off the wire end and then peel away about 25mm of the insulation layer.
2) Use a screwdriver to unscrew the terminal screw on the terminal board.
3) Use nippers to bend the solid wire into a ring that fits the terminal screw.
4) Form a proper ring and then put it on the terminal board. Use a screwdriver to tighten up the terminal screw.

(2) For strand wires (as shown below):

1) Use wire cutters to cut off the wire end and then peel away about 10mm of the insulation layer.
2) Use a screwdriver to unscrew the terminal screw on the terminal board.
3) Use a round terminal fastener or clamp to fix the round terminal firmly on the peeled wire end.
4) Locate the round terminal conduit. Use a screwdriver to replace it and tighten up the terminal screw (as shown below).

Unit: mm

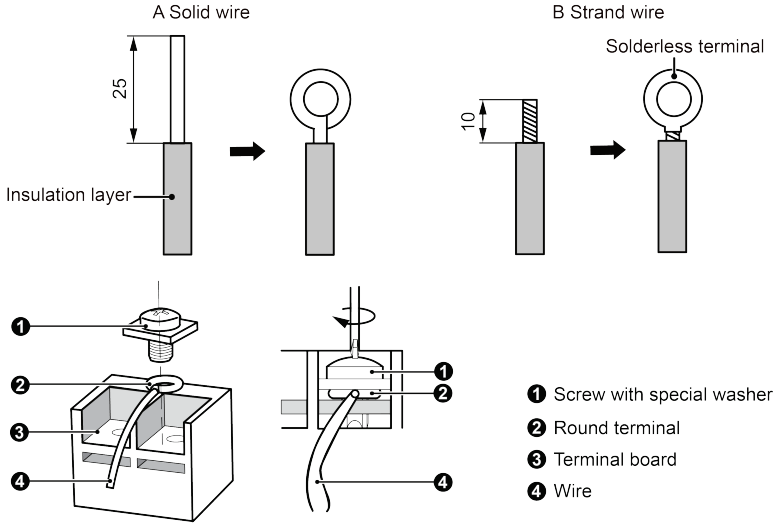

(3) How to connect the connection wire and power cord.

Lead the connection wire and power cord through the insulation tube. Then fix the wires with wire clamps (as shown in the following figure).

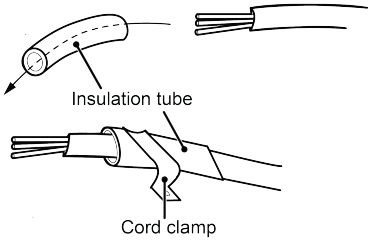

For the indoor unit whose packaging materials are with the buckle magnetic

ring. The engineering electric wires (live wire, neutral wire, earthing wire and communication cable) should pass through the buckle magnetic ring before entering into the unit. The magnetic ring should be fixed reliably by cable tie. The engineering wires and buckle magnetic ring are not allowed to touch sharp edges.

(Note: Only for CH-IDH140PRK2, CH-IDH160PRK2 units.)

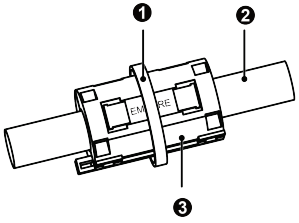

❶ Cable tie
❷ Engineering electric wires
❸ Buckle magnetic ring

Buckle magnetic ring shall be added in the power line communication cord of outdoor and indoor unit. The added buckle magnetic ring shall be fixed at the outlet of power line communication cord near the outdoor unit side; detailed operation step for the magnetic buckle is as follow:

1) Limit the fixation location of buckle magnetic ring at the outlet of power line communication cord near the outdoor unit side with a cable tie (refer to the mark 4 in the following picture) to prevent the buckle magnetic ring from sliding along the power line communication cord;
2) Then clasp the buckle magnetic ring to the location of power line communication cord confirmed with cable tie, after that, re-fix it with a cable tie (refer to the mark 3 in the following picture)

(Note:Only for CH-IU140RM2, CH-IU160RM2 units.)

❶ Engineering electric wires
❷ Buckle magnetic ring
❸ Cable tie 1
❹ Cable tie 2

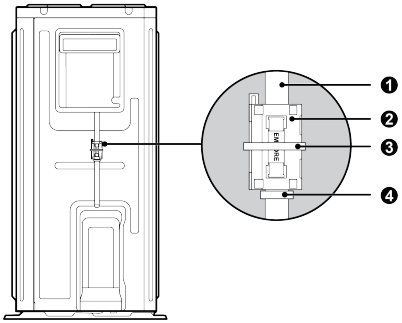

WARNING!
(1) Before working, please check whether the indoor and outdoor units are powered on.
(2) Match the terminal numbers and wire colors with the colors indicated in the indoor unit.
(3) Wrong wire connection may burn the electrical components.
(4) Connect the wires firmly to the wiring box. Incomplete installation may lead to fire hazard.
(5) Please use wire clamps to secure the external covers of connecting wires. (Insulators must be clamped securely; otherwise, electric leakage may occur.)
(6) Ground wire should be connected.

(4) Wire between indoor and outdoor units.

Single-phase unit: CH-IU035RK2, CH-IU050RK2

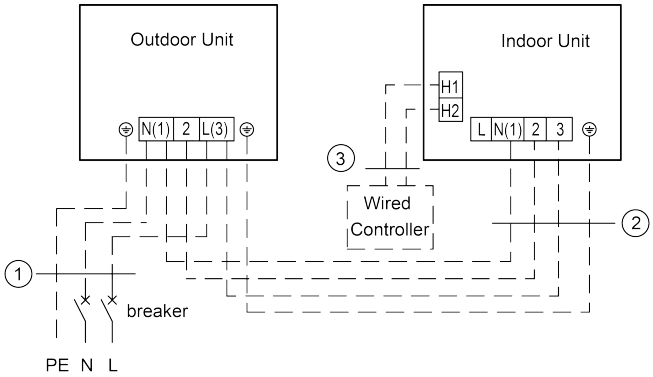

Power:220-240V ~50/60Hz

CH-IDS035PRK2+CH-IU035RK2
CH-IDS050PRK2+CH-IU050RK2
①. Power cords 3×1.5mm^2
②. Power cords 4×1.0mm^2
③. Communication cords 2×0.75mm^2

Single-phase unit: CH-IU071RK2, CH-IU085RK2

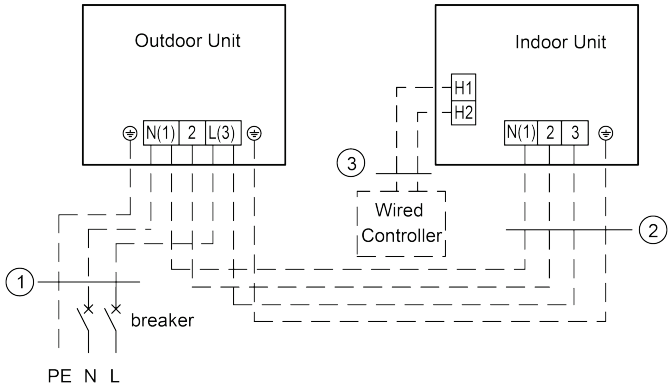

Power:220-240V ~50/60Hz

CH-IDS071PRK2+CH-IU071RK2
CH-IDS085PRK2+CH-IU085RK2
①. Power cords 3×2.5mm^2
②. Power cords 4×1.0mm^2
③. Communication cords 2×0.75mm^2

Three-phase unit: CH-IU100RM2, CH-IU125RM2, CH-IU140RM2, CH-IU160RM2

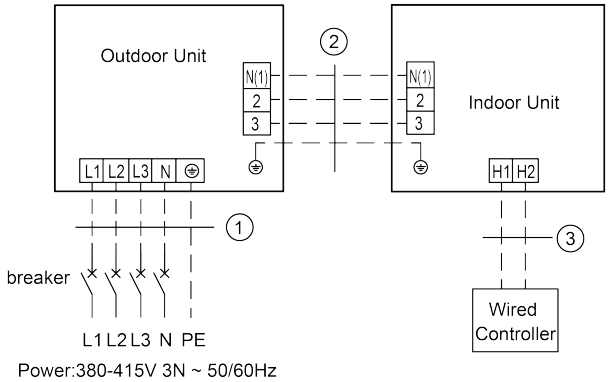

CH-IDH100PRK2+CH-IU100RM2
CH-IDH125PRK2+CH-IU125RM2
CH-IDH140PRK2+CH-IU140RM2
CH-IDH160PRK2+CH-IU160RM2
①. Power cords 5×1.5mm^2
②. Power cords 4×1.0mm^2
③. Communication cords 2×0.75mm^2

(5) Electrical wiring of indoor unit and outdoor unit.

WARNING!
(1) High and low voltage wires should be led through different rubber rings of the electric box cover.

WARNING!	
(2)	Do not bundle up the connection wire and communication wire of wired control or lay them side by side, otherwise errors will occur.
(3)	High and low voltage wires should be secured separately. Secure the former ones with big clamps and the latter ones with small clamps.
(4)	Use screws to tighten up the connection wires and power cords of indoor and outdoor units on the terminal board. Wrong connection may lead to fire hazard.
(5)	If the connection wires of indoor unit (outdoor unit) and power cords are not correctly connected, the air conditioner may get damaged.
(6)	Ground the indoor and outdoor units through connecting the ground wire.
(7)	The units should comply with applicable local and national rules and regulations on power consumption.
(8)	When connecting the power cord, make sure the phase sequence of the power supply matches with the corresponding terminals, otherwise the compressor will get reversed and operate abnormally.

1) Indoor side

Take off the electric box cover from the sub-assembly of electric box. Then connect the wires. Connect the connection wires of indoor unit according to the corresponding marks.

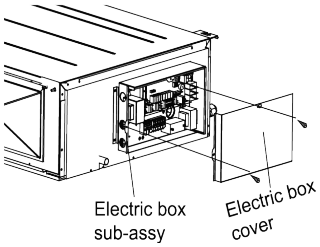

Model: CH-IDS035PRK2,

CH-IDS050PRK2.

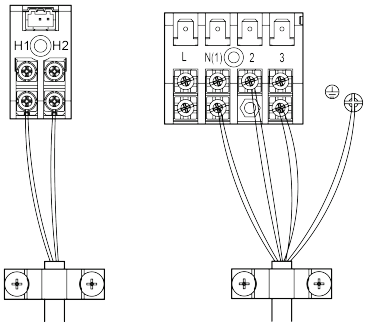

Model: CH-IDS071PRK2,

CH-IDS085PRK2.

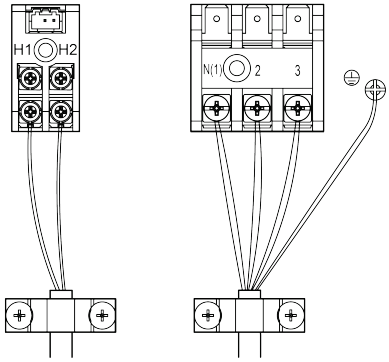

Model: CH-IDH100PRK2,CH-IDH125PRK2

CH-IDH140PRK2, CH-IDH160PRK2

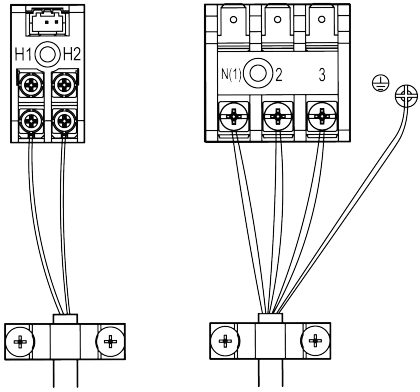

2) Outdoor side

Remove the big handle/front panel of the outdoor unit and insert one end of the communication cord and the power cord to the terminal board.

Wire routing of outdoor unit:

CH-IU035RK2,CH-IU050RK2,CH-IU071RK2

CH-IU085RK2

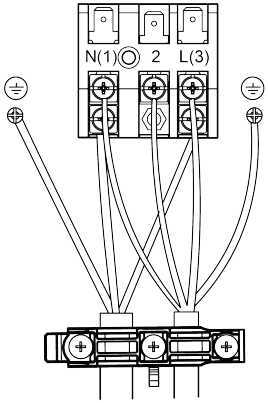

Three-phase unit: CH-IU100RM2,CH-IU125RM2,

CH-IU140RM2,CH-IU160RM2.

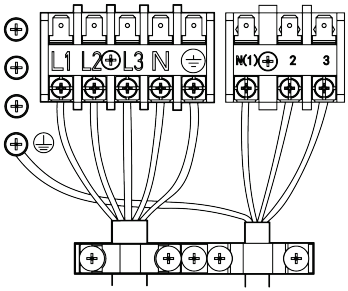

2.4 Check after Installation

Check Items after Installation.

Check items	Possible events due to improper installation
Is the main body installed securely?	The unit may fall down, vibrate or produce noise.
Did you do water leakage test?	Cooling capacity may become unsatisfactory.
Is the unit well insulated from heat?	Condensate, water drops may occur.
Does water drainage go well?	Condensate, water drops may occur.
Is the voltage consistent with that stated on the nameplate?	The unit may fail or its components may get burned.
Are the wires and pipes installed correctly?	The unit may fail or its components may get burned.
Has the unit been safely grounded?	Risk of electric leakage.
Do the specifications of wires comply with the requirement?	The unit may fail or its components may get burned.
Is there any obstacle blocking the air inlet and outlet of the indoor or outdoor units?	Cooling capacity may become unsatisfactory.
Have you recorded the length of refrigerant pipe and the refrigerant charging amount?	The refrigerant charging amount can't be controlled.

2.5 Product Operating Range

—	Cooling	Heating
Outdoor temperature DB(°C)	-20~52	-20~24
Indoor temperature DB/WB(°C) (Maximum)	32/23	27/-

2.6 Test Running

Preparation before connecting the power:

(1) Power must not be connected if the installation work is not completed.

(2) Control circuit is correct and all the wires are firmly connected.

(3) Cut-off valves of the gas pipe and liquid pipe are open.

(4) The inside of the unit should be clean. Take irrelevant objects out if there is any.

(5) After checking, re-install the front side plate.

Operation after connecting the power:

(1) If all the above works are finished, power on the unit.

(2) If the outside temperature is more than 30°C, heating mode can't be enabled.

(3) Make sure the indoor and outdoor units can run normally.

(4) If there's sound of liquid shock when the compressor is running, then stop the air conditioner immediately. Wait until the electric heating belt is heated enough, and then restart the air conditioner.

(5) Feel the air flow of the indoor unit to see if it is normal.

(6) Press the swing button or speed control button on remote control or wired control to see if the fan can run normally.

NOTES:

①. If you use remote control to turn off the unit and then immediately turn the unit on again, compressor will need 3min to restart. Even if you press "ON/OFF" button on the remote control, it won't be started up right away.

②. If there's no display on the wired control, it's probably because the connection wire between the indoor unit and wired control is not connected. Please check again.

3 Product Introduction

3.1 Overall Layout

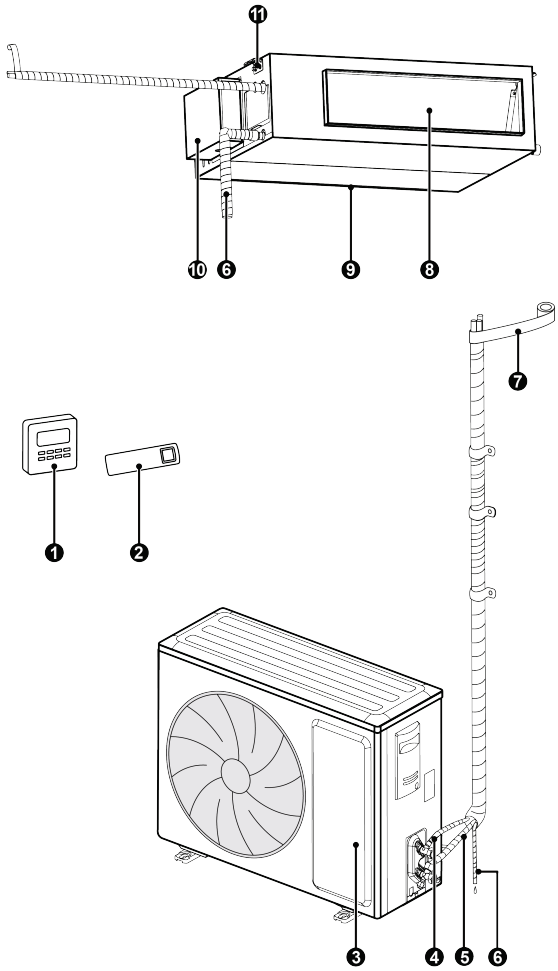

NOTES:

①. The connection pipe, drain pipe, power cord, and duct for this unit should be prepared by the user.

②. The unit is standard equipped with rectangular duct.

3.2 Standard Accessories

Indoor Unit Accessories				
No.	Name	Appearance	Q'ty	Usage
1	Wired Controller		1	To control the indoor unit.
2	Nut with Washer		4	To fix the hook on the cabinet of the unit.
3	Nut		4	To be used together with the hanger bolt for installing the unit.
4	Washer		4	To be used together with the hanger bolt for installing the unit.
5	Insulation	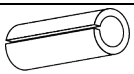	1	To insulate the gas pipe.
6	Insulation	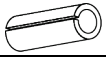	1	To insulate the liquid pipe.
7	Fastener		8	To fasten the sponge.
8	Sponge		2	To insulate the drain pipe.
9	Ordinary Nut+ Tamperproof box	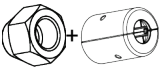	1	To prevent the removal of the gas pipe connecting nut (Refer to the fittings included in delivery.)
10	Ordinary Nut+ Tamperproof box	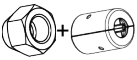	1	To prevent the removal of the liquid pipe connecting nut (Refer to the fittings included in delivery.)
11	Buckle magnetic ring+ Cable tie	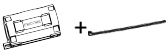	1+1	For engineering installation. (only CH-IDH140PRK2, CH-IDH160PRK2)

Outdoor Unit Accessories				
No.	Name	Appearance	Q'ty	Usage
1	Drain Plug	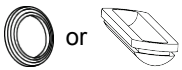	0 or 3 or 4 or 5	To plug the unused drain hole.
2	Drainage Connector	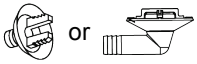	1	To connect with the hard PVC drain pipe.
3	Buckle magnetic ring+ Cable tie	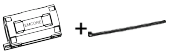	1+2	For engineering installation. (only CH-IU140RM2, CH-IU160RM2)

4 Installation of Controller

Refer to the wired controller or remote controller manual.

5 Maintenance

5.1 Failures Not Caused by Faults of the AC

(1) If your air conditioner fails to function normally, please first check the following items before maintenance:

Problem	Cause	Corrective measure
The air conditioner can't run.	If you turn off the unit and then immediately turn it on, in order to protect the compressor and avoid system overload, compressor will delay running for 3min.	Please wait for a while.
	Wire connection is wrong.	Connect wires according to the wiring diagram.
	Fuse or circuit breaker is broken.	Replace the fuse or switch on the circuit breaker.
	Power failure.	Restart after power is resumed.
	Power plug is loose.	Re-insert the power plug.
	Remote control has low battery.	Replace the batteries.

Problem	Cause	Corrective measure
Bad cooling or heating effect.	Air inlet and outlet of indoor or outdoor units have been blocked.	Clear the obstacles and keep the room for indoor and outdoor units well ventilated.
	Improper temperature setting	Reset a proper temperature.
	Fan speed is too low.	Reset a proper fan speed.
	Air flow direction is not right.	Change the direction of air louvers.
	Doors or windows are open.	Close them.
	Exposed under direct sunshine.	Put on curtains or louvers in front of the windows.
	Too many heat sources in the room.	Remove unnecessary heat sources.
	Filter is blocked or dirty.	Send for a professional to clean the filter.
	Air inlets or outlets of the units are blocked.	Clear away obstacles that are blocking the air inlets and outlets of indoor and outdoor units.

(2) The following situations are not operation failures.

Problem	Time of occurrence	Cause
Mist comes from the air conditioner.	During operation.	If the unit is running under high humidity, the wet air in the room will be quickly cooled down.
The air conditioner generates some noise.	System switches to heating mode after defrosting.	Defrosting process will generate some water, which will turn to water vapor.
	The air conditioner is buzzing at the beginning of operation.	Temperature control will be buzzing when it starts working. The noise will become weak 1min later.

Problem	Time of occurrence	Cause
Dust comes from the air conditioner.	When the unit is turned on, it purrs.	When the system is just started, the refrigerant is not stable. About 30s later, the purr of the unit becomes low.
	About 20s after the unit first enables the heating mode or there is refrigerant brushing sound when defrosting under heating.	It's the sound of 4-way valve switching direction. The sound will disappear after the valve changes its direction.
	There is hissing sound when the unit is started or stopped and a slight hissing sound during and after operation.	It's the sound of gaseous refrigerant that stops flowing and the sound of drainage system.
	There is a sound of crunching during and after operation.	Because of temperature change, front panel and other components may be swelled up and cause abrasion sound.
	There is a hissing sound when the unit is turned on or suddenly stopped during operation or after defrosting.	Because refrigerant suddenly stops flowing or changes the flow direction.
	The unit starts operation after being unused for a long time.	Dust inside the indoor unit comes out together with the air.
The air conditioner generates some smell.	During operation.	The room smell or the smell of cigarette comes out through the indoor unit.

NOTE: Check the above items and adopt the corresponding corrective measures. If the air conditioner continues to function poorly, please stop the air conditioner immediately and contact C&H's authorized local service center. Ask our professional service staff to check and repair the unit.

5.2 Error Code

WARNING!
(1) If abnormal things (for example, awful smell) occur, please stop the unit immediately and disconnect power. Then contact C&H's authorized service center. If the unit continues to run in abnormal situations, it may get damaged and cause electric shock or fire hazard.
(2) Do not repair the air conditioner by yourself. Improper maintenance will cause electric shock or fire hazard. Please contact C&H's authorized service center and send for professional service staff to repair.

If the display panel or wired control displays an error code, please refer to the error code meaning stated in the following table.

Error code	Error	Error code	Error
A1	Outdoor fan IPM module protection	LE	Compressor overspeed
Ac	Outdoor fan startup failure	LF	Power protection
Ad	Outdoor fan Phase-loss protection	LP	IDU and ODU unmatched
AE	Outdoor fan current detection circuit error	oE	ODU error, for specific error please see the status of ODU main board indicator
AJ	Outdoor fan out-of-step protection	P0	Driver reset protection
C0	Wired controller and indoor unit communication failure	P5	Compressor phase over-current protection
C1	Indoor ambient temperature sensor error	P6	Master control and driver communication error
C2	Evaporator temperature sensor error	P7	Module temperature sensor circuit failure
C3	Condenser temperature sensor error	P8	Driver module temperature protection
C4	ODU jumper cap error	P9	AC contractor protection
CJ	IDU jumper cap error	PA	ODU AC current protection
C6	Discharge temperature sensor error	PE	Temperature drift protection
C7	Condenser meso-temperature sensor error	PF	Driveboard ambient temperature sensor error

Error code	Error	Error code	Error
C8	Compressor dial code or jumper cap abnormal	PH	Bus high-voltage protection
C9	Compressor driver memory chip failure	PL	Bus low-voltage protection
CE	Wired controller temperature sensor error	PP	Input AC voltage error
CP	Multi-main wired controller failure	PU	Capacitor charging failure
dc	Compressor suction temperature sensor error	q0	DC indoor fan driver bus low-voltage protection
dH	Wired controller circuit board abnormal	q1	DC indoor fan driver bus high-voltage protection
dJ	AC sequence protection (phase loss or anti-phase protection)	q2	DC indoor fan AC current protection
E0	Indoor fan error	q3	DC indoor fan driver IPM module protection
E1	Compressor high pressure protection	q4	DC indoor fan driver PFC protection
E2	Indoor anti-freeze protection	q5	DC indoor fan startup failure
E3	Refrigerant lack protection or compressor low pressure protection	q6	DC indoor fan Phase-loss protection
E4	Compressor air discharge high-temperature protection	q7	DC indoor fan driver reset protection
E6	ODU and IDU communication error	q8	DC indoor fan over-current protection
E7	Mode conflict	q9	DC indoor fan power protection
E9	Water-full protection	qA	DC indoor fan driver current detection circuit error
EE	Memory chip reading and writing failure	qb	DC indoor fan out-of-step protection
EL	Emergency stop (fire alarm)	qC	Master control and DC indoor fan driver communication error
F3	Outdoor ambient temperature sensor error	qd	DC indoor fan driver module high temperature protection
Fo	Recycling refrigerant mode	qE	DC indoor fan driver module temperature sensor error

Error code	Error	Error code	Error
H1	Ordinary defrosting state	qF	DC indoor fan driver memory chip error
H4	Overload protection	qH	DC indoor fan driver charge loop error
H5	IPM module current protection	qL	DC indoor fan driver input AC voltage error protection
H7	Compressor out-of-step protection	qo	DC indoor fan driver electrical box temperature sensor error
HC	PFC overcurrent protection	qp	DC indoor fan driver AC input zero-crossing protection
HE	Compressor demagnetize protection	U1	Compressor phase current circuit detection error
L3	Outdoor fan 1 error	U2	Compressor phase-loss and anti-phase protection
L4	Wired controller power supply circuit poor	U3	DC bus voltage drop error
L5	Wired controller power supply overcurrent protection	U5	Overall current detection failure
L6	One control multi-machine endor quantity is inconsistent	U7	4–way valve switch-over error
L7	One control multi-machine endor series is inconsistent	U8	Zero-crossing protection
LA	Outdoor fan 2 error	UL	Outdoor fan overcurrent protection
Lc	Compressor startup failure	Uo	Outdoor ambient temperature abnormal(Temperature high opening heat mode or temperature over low open refrigeration mode)

NOTE: When the unit is connected with the wired controller, the error code will be simultaneously shown on it.

5.3 Unit Maintenance

NOTES!
(1) Before cleaning, please make sure the unit is stopped. Cut the circuit breaker and remove the power socket, otherwise, electric shock may occur.
(2) Do not wash the air conditioner with water, otherwise fire hazard or electric shock may occur.
(3) When cleaning the filter, please be careful of your steps. If you need to work high above the ground, please be extremely careful.

5.3.1 Filter screen cleaning

Increase the frequency of cleaning if the unit is installed in a room where the air is extremely contaminated (As a yardstick for yourself, consider cleaning the filter once a half year).

If dirt becomes impossible to clean, change the air filter. (Air filter for exchange is optional.)

(1) Removing the air filter from the duct.

(2) Cleaning the air filter.

Remove dust from the air filter using a vacuum cleaner and gently rinse them in cool water. Do not use detergent or hot water to avoid filter shrinking or deformation. After cleaning dry them in the shade.

(3) Replacing the air filter Reinstall the filter as before.

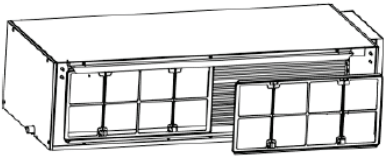

5.3.2 Heat Exchanger of Outdoor Unit

Conduct cleaning for the heat exchanger of outdoor unit periodically, clean it once at least in every two months. Clean the dust and sundries on the surface of the heat exchanger with dust collector and nylon brush, if there's compressed air source; use the compressed air to blow the dust on the surface of the heat exchanger. Don't use tap water for cleaning.

5.3.3 Drainage Pipe

Periodically check if the drainage pipe is blocked to smooth the condensate water.

5.3.4 Notices at the Beginning of the Using Season

(1) Check if the air inlet/outlet of indoor/outdoor unit is blocked.
(2) Check if the ground connection is reliable.
(3) Check if the battery of remote controller is replaced.
(4) Check if the air filter screen is properly installed.
(5) If starting up again after long-term shut down, preset the power switch of air conditioner to “ON” status before 8h of operation, to preheat the crankcase of outdoor compressor.
(6) Check if the installation of outdoor unit is firm, if not, please contact with C&H appointed maintenance center.

5.3.5 Maintenance at the End of the Using Season

(1) Cut off the main power of air conditioner.
(2) Clean the filter screen, indoor and outdoor unit.
(3) Clean the dust and sundries in indoor and outdoor unit.
(4) If the outdoor unit is rusty, coat the rusty location with paint to prevent it from expanding.

5.3.6 Components Replacement

Components are available in C&H agency or C&H distributors nearby.

5.4 Notice on Maintenance

5.4.1 Information on Servicing

The manual shall contain specific information for service personnel who shall be instructed to undertake the following when servicing an appliance that employs a flammable refrigerant.

5.4.1.1 Checks to the Area

Prior to beginning work on systems containing flammable refrigerants, safety checks are necessary to ensure that the risk of ignition is minimized. For repair to the refrigerating system, the following precautions shall be complied with prior to conducting work on the system.

5.4.1.2 Work Procedure

Work shall be undertaken under a controlled procedure so as to minimize the risk of a flammable gas or vapour being present while the work is being performed.

5.4.1.3 General Work Area

All maintenance staff and others working in the local area shall be instructed on the nature of work being carried out. Work in confined spaces shall be avoided. The area around the workspace shall be sectioned off. Ensure that the conditions within the area have been made safe by control of flammable material.

5.4.1.4 Checking for Presence of Refrigerant

The area shall be checked with an appropriate refrigerant detector prior to and during work, to ensure the technician is aware of potentially flammable atmospheres. Ensure that the leak detection equipment being used is suitable for use with flammable refrigerants, i.e. non-sparking, adequately sealed or intrinsically safe.

5.4.1.5 Presence of Fire Extinguisher

If any hot work is to be conducted on the refrigeration equipment or any associated parts, appropriate fire extinguishing equipment shall be available to hand. Have a dry powder or CO_2 fire extinguisher adjacent to the charging area.

5.4.1.6 No Ignition Sources

No person carrying out work in relation to a refrigeration system which involves exposing any pipe work that contains or has contained flammable refrigerant shall use any sources of ignition in such a manner that it may lead to the risk of fire or explosion. All possible ignition sources, including cigarette smoking, should be kept sufficiently far away from the site of installation, repairing, removing and disposal, during which flammable refrigerant can possibly be released to the surrounding space. Prior to work taking place, the area around the equipment is to be surveyed to make sure that there are no flammable hazards or ignition risks. “No Smoking” signs shall be displayed.

5.4.1.7 Ventilated Area

Ensure that the area is in the open or that it is adequately ventilated before breaking into the system or conducting any hot work. A degree of ventilation shall continue during the period that the work is carried out. The ventilation should safely

disperse any released refrigerant and preferably expel it externally into the atmosphere.

5.4.1.8 Checks to the Refrigeration Equipment

Where electrical components are being changed, they shall be fit for the purpose and to the correct specification. At all times the manufacturer's maintenance and service guidelines shall be followed. If in doubt consult the manufacturer's technical department for assistance.

The following checks shall be applied to installations using flammable refrigerants:

(1) The charge size is in accordance with the room size within which the refrigerant containing parts are installed.

(2) The ventilation machinery and outlets are operating adequately and are not obstructed.

(3) If an indirect refrigerating circuit is being used, the secondary circuit shall be checked for the presence of refrigerant.

(4) Marking to the equipment continues to be visible and legible. Markings and signs that are illegible shall be corrected.

(5) Refrigeration pipe or components are installed in a position where they are unlikely to be exposed to any substance which may corrode refrigerant containing components, unless the components are constructed of materials which are inherently resistant to being corroded or are suitably protected against being so corroded.

5.4.1.9 Checks to electrical devices

Repair and maintenance to electrical components shall include initial safety checks and component inspection procedures. If a fault exists that could compromise safety, then no electrical supply shall be connected to the circuit until it is satisfactorily dealt with. If the fault cannot be corrected immediately but it is necessary to continue operation, an adequate temporary solution shall be used. This shall be reported to the owner of the equipment so all parties are advised.

Initial safety checks shall include:

(1) That capacitors are discharged: this shall be done in a safe manner to avoid possibility of sparking.

(2) That no live electrical components and wiring are exposed while charging, recovering or purging the system.

(3) That there is continuity of earth bonding.

5.4.2 Repairs to Sealed Components

(1) During repairs to sealed components, all electrical supplies shall be disconnected from the equipment being worked upon prior to any removal of sealed covers, etc. If it is absolutely necessary to have an electrical supply to equipment during servicing, then a permanently operating form of leak detection shall be located at the most critical point to warn of a potentially hazardous situation.

(2) Particular attention shall be paid to the following to ensure that by working on electrical components, the casing is not altered in such a way that the level of protection is affected. This shall include damage to cables, excessive number of connections, terminals not made to original specification, damage to seals, incorrect fitting of glands, etc.

Ensure that apparatus is mounted securely.

Ensure that seals or sealing materials have not degraded such that they no longer serve the purpose of preventing the ingress of flammable atmospheres. Replacement parts shall be in accordance with the manufacturer's specifications.

NOTE: The use of silicon sealant may inhibit the effectiveness of some types of leak detection equipment. Intrinsically safe components do not have to be isolated prior to working on them.

5.4.3 Repair to Intrinsically Safe Components

Do not apply any permanent inductive or capacitance loads to the circuit without ensuring that this will not exceed the permissible voltage and current permitted for the equipment in use.

Intrinsically safe components are the only types that can be worked on while live in the presence of a flammable atmosphere. The test apparatus shall be at the correct rating.

Replace components only with parts specified by the manufacturer. Other parts may result in the ignition of refrigerant in the atmosphere from a leak.

5.4.4 Cabling

Check that cabling will not be subject to wear, corrosion, excessive pressure, vibration, sharp edges or any other adverse environmental effects. The check shall also take into account the effects of ageing or continual vibration from sources such as compressors or fans.

5.4.5 Detection of Flammable Refrigerants

Under no circumstances shall potential sources of ignition be used in the searching for or detection of refrigerant leaks. A halide torch (or any other detector using a naked flame) shall not be used.

5.4.6 Removal and Evacuation

When breaking into the refrigerant circuit to make repairs – or for any other purpose –conventional procedures shall be used. However, it is important that best practice is followed since flammability is a consideration. The following procedure shall be adhered to:

(1) Remove refrigerant.
(2) Purge the circuit with inert gas.
(3) Evacuate.
(4) Purge again with inert gas.
(5) Open the circuit by cutting or brazing.

The refrigerant charge shall be recovered into the correct recovery cylinders. The system shall be “flushed” with OFN to render the unit safe. This process may need to be repeated several times. Compressed air or oxygen shall not be used for this task.

Flushing shall be achieved by breaking the vacuum in the system with OFN and continuing to fill until the working pressure is achieved, then venting to atmosphere, and finally pulling down to a vacuum. This process shall be repeated until no refrigerant is within the system. When the final OFN charge is used, the system shall be vented down to atmospheric pressure to enable work to take place. This operation is absolutely vital if brazing operations on the pipework are to take place.

Ensure that the outlet for the vacuum pump is not close to any ignition sources and there is ventilation available.

5.4.7 Charging Procedures

In addition to conventional charging procedures, the following requirements shall be followed.

(1) Ensure that contamination of different refrigerants does not occur when using charging equipment. Hoses or lines shall be as short as possible to minimize the amount of refrigerant contained in them.

(2) Cylinders shall be kept upright.

(3) Ensure that the refrigeration system is earthed prior to charging the system with refrigerant.

(4) Label the system when charging is complete (if not already).

(5) Extreme care shall be taken not to overfill the refrigeration system.

(6) Prior to recharging the system it shall be pressure tested with OFN. The system shall be leak tested on completion of charging but prior to commissioning. A follow up leak test shall be carried out prior to leaving the site.

5.4.8 Decommissioning

Before carrying out this procedure, it is essential that the technician is completely familiar with the equipment and all its detail. It is recommended good practice that all refrigerants are recovered safely. Prior to the task being carried out, an oil and refrigerant sample shall be taken in case analysis is required prior to re-use of reclaimed refrigerant. It is essential that electrical power is available before the task is commenced:

(1) Become familiar with the equipment and its operation.

(2) Isolate system electrically.

(3) Before attempting the procedure ensure that:

1) Mechanical handling equipment is available, if required, for handling refrigerant cylinders.

2) All personal protective equipment is available and being used correctly.

3) The recovery process is supervised at all times by a competent person.

4) Recovery equipment and cylinders conform to the appropriate standards.

(4) Pump down refrigerant system, if possible.

(5) If a vacuum is not possible, make a manifold so that refrigerant can be removed from various parts of the system.

(6) Make sure that cylinder is situated on the scales before recovery takes place.

(7) Start the recovery machine and operate in accordance with manufacturer's instructions.

(8) Do not overfill cylinders. (No more than 80 % volume liquid charge).

(9) Do not exceed the maximum working pressure of the cylinder, even temporarily.

(10) When the cylinders have been filled correctly and the process completed, make sure that the cylinders and the equipment are removed from site promptly and all isolation valves on the equipment are closed off.

(11) Recovered refrigerant shall not be charged into another refrigeration system unless it has been cleaned and checked.

5.4.9 Labelling

Equipment shall be labelled stating that it has been de-commissioned and emptied of refrigerant. The label shall be dated and signed. Ensure that there are labels on the equipment stating the equipment contains flammable refrigerant.

5.4.10 Recovery

When removing refrigerant from a system, either for servicing or decommissioning, it is recommended good practice that all refrigerants are removed safely.

When transferring refrigerant into cylinders, ensure that only appropriate refrigerant recovery cylinders are employed. Ensure that the correct number of cylinders for holding the total system charge are available. All cylinders to be used are designated for the recovered refrigerant and labelled for that refrigerant (i.e. special cylinders for the recovery of refrigerant).

Cylinders shall be complete with pressure relief valve and associated shut-off valves in good working order. Empty recovery cylinders are evacuated and, if possible, cooled before recovery occurs.

The recovery equipment shall be in good working order with a set of instructions concerning the equipment that is at hand and shall be suitable for the

recovery of flammable refrigerants. In addition, a set of calibrated weighing scales shall be available and in good working order. Hoses shall be complete with leak-free disconnect couplings and in good condition. Before using the recovery machine, check that it is in satisfactory working order, has been properly maintained and that any associated electrical components are sealed to prevent ignition in the event of a refrigerant release. Consult manufacturer if in doubt.

The recovered refrigerant shall be returned to the refrigerant supplier in the correct recovery cylinder, and the relevant Waste Transfer Notice arranged. Do not mix refrigerants in recovery units and especially not in cylinders.

If compressors or compressor oils are to be removed, ensure that they have been evacuated to an acceptable level to make certain that flammable refrigerant does not remain within the lubricant. The evacuation process shall be carried out prior to returning the compressor to the suppliers. Only electric heating to the compressor body shall be employed to accelerate this process. When oil is drained from a system, it shall be carried out safely.

5.5 After-sales Services

Any quality or other issues encountered in the purchased air conditioner, please contact the local C&H after-sales service department.

66139904255