Air-to-water Heat Pump Wired Controller

“UNITHERM”

Service Manual

Commercial Air Conditioners

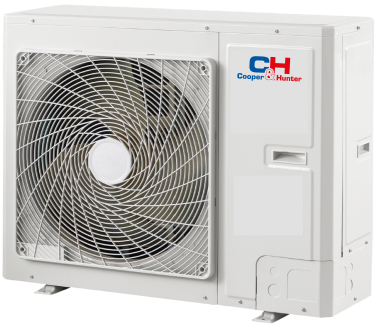

Thank you for choosing Commercial Air Conditioners, please read this service manual carefully before operation and retain it for future reference.

CONTENTS

PRODUCT 2
1 MODELS LIST 2
1.1 Main Unit 2
1.2 Water Tank 2
2 NOMENCLATURE 3
2.1 Main Unit 3
2.2 Water Tank 3
3 FUNCTION 3
3.1 Cooling 3
3.2 Heating 3
3.3 Water Heating 3
3.4 Cooling +Water Heating 4
3.5 Heating+ Water Heating 4
3.6 Emergency Mode 4
3.7 Quick Water Heating 4
3.8 Holiday Mode 4
3.9 Forced Operation Mode 4
3.10 Silent Mode 4
3.11 Disinfection Mode 4
3.12 Weather-dependent Heating Mode 4
3.13 Floor Commissioning 4
3.14 Air Removal of the Water System 4
4 PRODUCT DATA 5
4.1 Product Data at Rated Condition 5
4.2 Operation Range 10
4.3 Electrical Data 10
5 PIPING DIAGRAM 11
UNITS CONTROL 13
1 OPERATION FLOWCHART 13
2 MAIN LOGIC 14
2.1 Defrosting Mode 14
2.2 Water-side Auto Anti-freezing in Winter 14
2.3 Control of Heating Tape on Chassis 14
2.4 Control of Fan 14
2.5 Control of Compressor 14
2.6 Control of Electric Expansion Valve 14
3 WIRED CONTROLLER 15
3.1 Dimension 15
3.2 Function 15
3.3 Operation Instruction 17
3.4 De-installation and Re-installation of the Control 35
4 CONTROL WIRING DESIGN 36

INSTALLATION 38
1 INSTALLATION OF UNITS 38
1.1 Installation Positions 38
1.2 Matters Need Attention 38
1.3 Dimension Data and Installation Guide 39
1.4 Installation Clearance Data 45
1.5 The Method of Calculating the Charging Pressure of Expansion Vesse 47
1.6 Connection of Pipeline 49
2 ELECTRIC WIRING WORK 51
2.1 Wiring Principle 51
2.2 PCB Outline 52
2.3 Electric Wiring Design 57
UNITS MAINTENANCE 71
1 ERROR CODE LIST 71
2 FLOW CHART OF TROUBLESHOOTING 75
3 DIAGNOSIS OF DRIVING 79
3.1 Diagnosis Flowchart of Driving of Single-phase Unit and Three-phase Unit 79
4 DISASSEMBLY AND ASSEMBLY PROCEDURE OF MAIN PARTS 83
5 EXPLODED VIEWS AND PART LIST 100
5.1 Outdoor Exploded View and Part List 100
5.2 Indoor Exploded View and Part List 106
5.3 Water Tank Exploded View and Part List 111

PRODUCT

PRODUCT

1 MODELS LIST

1.1 Main Unit

Model			Nominal Capacity	Refrigerant	Power Supply	Appearance	
Model Name		Product Code	kW		V,Ph,Hz	Outdoor Unit	Indoor Unit
CH-HP6.0SINK	CH-HP6.0SINK(I)	ER010N1100	6.2	R410A	230,1,50		
	CH-HP6.0SINK(O)	ER010W1100					
CH-HP8.0SINK	CH-HP8.0SINK(I)	ER010N1110	8.5				
	CH-HP8.0SINK(O)	ER010W1110					
CH-HP10SINK	CH-HP10SINK(I)	ER010N1120	9.6				
	CH-HP10SINK(O)	ER010W1120					
CH-HP12SINK	CH-HP12SINK(I)	ER010N1130	12.5				
	CH-HP12SINK(O)	ER010W1130					
CH-HP14SINK	CH-HP14SINK(I)	ER010N1140	13.5				
	CH-HP14SINK(O)	ER010W1140					
CH-HP16SINK	CH-HP16SINK(I)	ER010N1150	15.5				
	CH-HP16SINK(O)	ER010W1150					
CH-HP12SINM	CH-HP12SINM(I)	ER010N1160	12.5		400,3,50		
	CH-HP12SINM(O)	ER010W1160					
CH-HP14SINM	CH-HP14SINM(I)	ER010N1170	14.2				
	CH-HP14SINM(O)	ER010W1170					
CH-HP16SINM	CH-HP16SINM(I)	ER010N1180	15.5				
	CH-HP16SINM(O)	ER010W1180					

Note:1Ton =12000Btu/h = 3.517kW

1.2 Water Tank

Model	Product Code	Nominal Cubage(L)	Appearance
WT200FH3EK	ER20000160	200	
WT200FH3EM	ER20000240	200	
WT300FH3EK	ER20000180	300	
WT300FH3EM	ER20000250	300	
WT2002FH3EK	ER20000170	200	
WT2002FH3EM	ER20000260	200	
WT3002FH3EK	ER20000190	300	
WT3002FH3EM	ER20000270	300	

2 NOMENCLATURE

2.1 Main Unit

CH	-	HP	16	S	I	N	K	(I)
1		2	3	4	5	6	7	8

NO.	Description	Options
1	C&H Air to water heat pump	-
2	Heat Pump Water Heater	-
3	Nominal Heating capacity	16
4	Type	Split type
5	Type of inverter	DC Inverter
6	Refrigerant Type	N-R410A
7	Power Supply	K=220-240V,~,50Hz; M=380-415V,3N~,50Hz; H=380V
8	Indoor Unit	I-Indoor unit, O-outdoor unit

2.2 Water Tank

WT	200	-/2	F	H	3	E	K
1	2	3	4	5	6	7	8

NO.	Description	Options
1	Tank Used in Heat Pump	/
2	Volume of Tank	/
3	Static Heating with Dual Coiled Pipe	- =Static Heating with single Coiled Pipe ; / 2=Static Heating with Dual Coiled Pipe
4	Stand	/
5	Pressure-Resistant	/
6	Electric power	3kW
7	Electric heater	/
8	Power Supply	K=220-240V,~,50Hz; M=380-415V,3N~,50Hz; H=380V

3 FUNCTION

3.1 Cooling

In cooling mode: the refrigerant is condensed in the outdoor unit and evaporated in the indoor unit. Via the heat exchange with water in the indoor unit, the temperature of water decreases and it releases heat while the refrigerant absorbs heat and evaporates. With the help of wired controller, the outflow temperature can meet the user's requirement. Through the control of valve, the low-temperature water in the system is connected with indoor fan coil and underground pipe, and exchanges heat with the indoor air so that the indoor temperature decreases to the required range.

3.2 Heating

In heating mode: the refrigerant evaporates in the outdoor unit and is condensed in the indoor unit. Via the heat exchange with water in the indoor unit, the water absorbs heat and its temperature increases while the refrigerant releases heat and is condensed. With the help of wired controller, the outflow temperature can meet the user's requirement. Through the control of valve, the high-temperature water in the system is connected with indoor fan coil and underground pipe, and exchanges heat with the indoor air so that the indoor temperature increases to the required range;

3.3 Water Heating

In water heating mode: the refrigerant evaporates in the outdoor unit and is condensed in the indoor unit. Via the heat exchange with water in the indoor unit, the water absorbs heat and its temperature increases while the refrigerant releases heat and is condensed. With the help of wired controller, the outflow temperature can meet the user's requirement. Through the control of valve, the high-temperature water in the system is connected with the coil pipe of bearing water tank, and exchanges heat with the water in the water tank so that the temperature of water tank increases to the required range.

3.4 Cooling +Water Heating

When cooling mode exists together with the water heating mode, the user can set the priority of these two modes based on the needs. The default priority is heat pump. That is under the default setting, if cooling mode exists together with the water heating mode, the heat pump gives priority to cooling. In that case, water heating can only realized with e-heater of the water tank. Inversely, the heat pump gives priority to water heating and switches to cooling after finishing water heating.

3.5 Heating+ Water Heating

When heating mode exists together with the water heating mode, the user can set the priority of these two modes based on the needs. The default priority is heat pump. That is under the default setting, if heating mode exists together with the water heating mode, the heat pump gives priority to heating. In that case, water heating can only realized with e-heater of the water tank. Inversely, the heat pump gives priority to water heating and switches to heating after finishing water heating.

3.6 Emergency Mode

Emergency mode: this mode is only available for heating and water heating. When the outdoor unit stops due to malfunction, it will enter the corresponding emergency mode; as to heating mode, after entering the emergency mode, heating can only be realized through e-heater of the indoor unit. When the setting outflow temperature or indoor temperature is reached, the e-heater of indoor unit will stop running; as to water heating mode, the e-heater of indoor unit stops while the e-heater of water tank runs. When the setting temperature or water tank is reached, the e-heater will stop running.

3.7 Quick Water Heating

In quick water heating mode, the unit runs according to the water heating control of heat pump and the e-heater of water tank runs at the same time.

3.8 Holiday Mode

This mode is only available for heating mode. This mode is set to keep indoor temperature or outflow temperature in a certain range, so as to prevent water system of the unit from freezing or protect certain indoor articles from freezing damage. (This mode requires installing indoor temperature sensor). When the outdoor unit stops due to malfunction, the two e-heaters of the unit will run.

3.9 Forced Operation Mode

This mode is only used for refrigerant recovery and debugging of the unit.

3.10 Silent Mode

Silent mode is available in cooling, heating and water heating mode. In silent mode, the outdoor unit will reduce the running noise via automatic control.

3.11 Disinfection Mode

In this mode, the water heating system can be disinfected. When starting up the disinfection function and setting corresponding time to meet the requirement of disinfection mode, the function will start. After the setting temperature is reached, this mode will terminate.

3.12 Weather-dependent Heating Mode

This mode is only available for space heating. In weather-dependent heating mode, the indoor temperature is detected and controlled automatically.

3.13 Floor Commissioning

This function is intended to preheat the floor periodically for the initial use.

3.14 Air Removal of the Water System

This function is intended to replenish water and remove air in the water system to make the equipment run at the stabilized water pressure.

4 PRODUCT DATA

4.1 Product Data at Rated Condition

Due to continues improvement on the products, the specifications listed above are subject to change without notice, and the ones on the products nameplate should be referred to as final.

4.1.1 Outdoor Unit

Model			CH-HP6.0SINK(O)	CH-HP8.0SINK(O)	CH-HP10SINK(O)
Product Code			ER010W1100	ER010W1110	ER010W1120
Capacity*1	Cooling(floor cooling)	kW	5.8	8.5	10
	Heating(floor heating)	kW	6.2	8.5	9.6
Power Input*1	Cooling(floor cooling)	kW	1.53	2.54	3.28
	Heating(floor heating)	kW	1.43	2.05	2.36
EER*1(floor heating)		W/W	3.8	3.35	3.05
COP*1(floor heating)		W/W	4.35	4.15	4.1
Capacity*2	Cooling(Fan coil)	kW	4.2	6.2	7.5
	Heating(Fan coil or Radiator)	kW	5.4	7.5	8.5
Power Input*2	Cooling(for Fan coil)	kW	1.56	2.38	3.00
	Heating(Fan coil or Radiator)	kW	1.74	2.50	2.79
EER*2(Fan coil)		W/W	2.7	2.61	2.50
COP*2(Fan coil or Radiator)		W/W	3.1	3.00	3.05
Refrigerant charge volume		kg	1.9	2.1	2.1
Sanitary water Temperature		℃	40~80	40~80	40~80
Sound Pressure Level	cooling	dB(A)	51	54	54
	heating	dB(A)	52	55	55
Connecting pipe	Gas	inch(mm)	φ5/8(15.9)	φ5/8(15.9)	φ5/8(15.9)
	Liquid	inch(mm)	φ3/8(9.52)	φ3/8(9.52)	φ3/8(9.52)
Dimensions (W×D×H)	Outline	mm	980×360×790	980×360×790	980×360×790
	Packaged	mm	1097×477×862	1097×477×862	1097×477×862
Net weight/Gross weight		kg	77/82	78.5/83.5	78.5/83.5

Notes:

[1] Capacities and power inputs are based on the following conditions:
a. Cooling conditions
Indoor Water Temperature 23°C/18°C;
Outdoor Air Temperature 35°CDB/24°CWB
b. Heating conditions
Indoor Water Temperature 30°C/35°C;
Outdoor Air Temperature 7°CDB/6°CWB
c. Standard piping length 7.5m

[2] Capacities and power inputs are based on the following conditions:
a. Cooling conditions
Indoor Water Temperature 12°C/7°C;
Outdoor Air Temperature 35°CDB/24°CWB
b. Heating conditions
Indoor Water Temperature 40°C/45°C;
Outdoor Air Temperature 7°CDB/6°CWB
c. Standard piping length 7.5m

Model			CH-HP12SINK(O)	CH-HP14SINK(O)	CH-HP16SINK(O)
Product Code			ER010W1130	ER010W1140	ER010W1150
Capacity*1	Cooling(floor cooling)	kW	12.5	13.5	14.5
	Heating(floor heating)	kW	12.5	13.5	15.5
Power Input*1	Cooling(floor cooling)	kW	3.57	4.09	4.53
	Heating(floor heating)	kW	2.80	3.06	3.78
EER*1(floor heating)		W/W	3.5	3.3	3.2
COP*1(floor heating)		W/W	4.45	4.4	4.1
Capacity*2	Cooling(for Fan coil)	kW	9.5	10	10.5
	Heating(Fan coil or Radiator)	kW	11	12	14
Power Input*2	Cooling(for Fan coil)	kW	3.39	3.57	3.96
	Heating(Fan coil or Radiator)	kW	3.14	3.36	4
EER*2(Fan coil)		W/W	2.8	2.8	2.65
COP*2(Fan coil or Radiator)		W/W	3.5	3.45	3.5
Refrigerant charge volume		kg	3.2	3.2	3.2
Sanitary water Temperature		℃	40~80	40~80	40~80
Sound Pressure Level	cooling	dB(A)	55	55	57
	heating	dB(A)	57	57	58
Connecting pipe	Gas	inch(mm)	φ5/8(15.9)	φ5/8(15.9)	φ5/8(15.9)
	Liquid	inch(mm)	φ3/8(9.52)	φ3/8(9.52)	φ3/8(9.52)
Dimensions (W×D×H)	Outline	mm	900×412×1345	900×412×1345	900×412×1345
	Packaged	mm	998×458×1515	998×458×1515	998×458×1515
Net weight/Gross weight		kg	106/118	106/118	106/118

Notes:

[1] Capacities and power inputs are based on the following conditions:
d. Cooling conditions
Indoor Water Temperature 23°C/18°C;
Outdoor Air Temperature 35°CDB/24°CWB
e. Heating conditions
Indoor Water Temperature 30°C/35°C;
Outdoor Air Temperature 7°CDB/6°CWB
f. Standard piping length 7.5m
[2] Capacities and power inputs are based on the following conditions:
a. Cooling conditions
Indoor Water Temperature 12°C/7°C;
Outdoor Air Temperature 35°CDB/24°CWB
b. Heating conditions
Indoor Water Temperature 40°C/45°C;
Outdoor Air Temperature 7°CDB/6°CWB
c. Standard piping length 7.5m

Model			CH-HP12SINM(O)	CH-HP14SINM(O)	CH-HP16SINM(O)
Product Code			ER010W1160	ER010W1170	ER010W1180
Capacity*1	Cooling(floor cooling)	kW	13.5	14.5	15.0
	Heating(floor heating)	kW	12.5	14.2	15.5
Power Input*1	Cooling(floor cooling)	kW	3.46	3.91	4.11
	Heating(floor heating)	kW	2.75	3.23	3.78
EER*1(floor heating)		W/W	3.90	3.71	3.65
COP*1(floor heating)		W/W	4.55	4.40	4.10
Capacity*2	Cooling(for Fan coil)	kW	9.5	10.5	11
	Heating(Fan coil or Radiator)	kW	11.5	12.5	14
Power Input*2	Cooling(for Fan coil)	kW	3.17	3.56	3.73
	Heating(Fan coil or Radiator)	kW	3.38	3.62	4.12
EER*2(Fan coil)		W/W	3.0	2.95	2.95
COP*2(Fan coil or Radiator)		W/W	3.4	3.45	3.4
Refrigerant charge volume		kg	3.4	3.4	3.4
Sanitary water Temperature		℃	40~80	40~80	40~80
Sound Pressure Level	cooling	dB(A)	55	55	56
	heating	dB(A)	57	57	59
Connecting pipe	Gas	inch(mm)	φ5/8(15.9)	φ5/8(15.9)	φ5/8(15.9)
	Liquid	inch(mm)	φ3/8(9.52)	φ3/8(9.52)	φ3/8(9.52)
Dimensions (W×D×H)	Outline	mm	900×412×1345	900×412×1345	900×412×1345
	Packaged	mm	998×458×1515	998×458×1515	998×458×1515
Net weight/Gross weight		kg	107/117	107/117	107/117

Notes:

[1] Capacities and power inputs are based on the following conditions:
d. Cooling conditions
Indoor Water Temperature 23°C/18°C;
Outdoor Air Temperature 35°CDB/24°CWB
e. Heating conditions
Indoor Water Temperature 30°C/35°C;
Outdoor Air Temperature 7°CDB/6°CWB
f. Standard piping length 7.5m

[2] Capacities and power inputs are based on the following conditions:
a. Cooling conditions
Indoor Water Temperature 12°C/7°C;
Outdoor Air Temperature 35°CDB/24°CWB
b. Heating conditions
Indoor Water Temperature 40°C/45°C;
Outdoor Air Temperature 7°CDB/6°CWB
c. Standard piping length 7.5m

4.1.2 Indoor Unit

Model			CH-HP6.0SINK(I)	CH-HP8.0SINK(I)	CH-HP10SINK(I)
Product Code			ER010N1100	ER010N1110	ER010N1120
Power Supply		V/Ph/Hz	220-240/1/50	220-240/1/50	220-240/1/50
Norminal input		W	3200	6200	6200
Leaving water temperature	Cooling*1	℃	7~25	7~25	7~25
	Cooling*2	℃	18~25	18~25	18~25
	Heating*1	℃	25~55(High temperature cycle)		
	Heating*2	℃	25~45(Low temperature cycle)		
Pump	Type	-	Water-cooled	Water-cooled	Water-cooled
	Nr. of speed	-	3	3	3
	Power input	W	200	200	200
	Water flow limit	LPM	12	12	12
Electric Heater	Operation	-	Automatic	Automatic	Automatic
	Steps	-	1	2	2
	Capacity	kW	3	6	6
	Combination	kW	3*1	3+3	3+3
	Power input	Ph/V/Hz	1/230/50	1/230/50	1/230/50
Sound pressure level		dB(A)	31	31	31
Connecting pipe	Gas	inch(mm)	φ5/8(15.9)	φ5/8(15.9)	φ5/8(15.9)
	Liquid	inch(mm)	φ3/8(9.52)	φ3/8(9.52)	φ3/8(9.52)
Dimensions (W×D×H)	Outline	mm	900x500x324	900x500x324	900x500x324
	Packaged	mm	1043×608×395	1043×608×395	1043×608×395
Net weight/Gross weight		kg	57.5/67	57.5/68	57.5/68

Model			CH-HP12SINK(I)	CH-HP14SINK(I)	CH-HP16SINK(I)
Product Code			ER010N1130	ER010N1140	ER010N1150
Power Supply		V/Ph/Hz	220-240/1/50	220-240/1/50	220-240/1/50
Norminal input		W	6200	6200	6200
Leaving water temperature	Cooling*1	℃	7~25	7~25	7~25
	Cooling*2	℃	18~25	18~25	18~25
	Heating*1	℃	25~55(High temperature cycle)		
	Heating*2	℃	25~45(Low temperature cycle)		
Pump	Type	-	Water-cooled	Water-cooled	Water-cooled
	Nr. of speed	-	3	3	3
	Power input	W	200	200	200
	Water flow limit	LPM	12	12	12
Electric Heater	Operation	-	Automatic	Automatic	Automatic
	Steps	-	2	2	2
	Capacity	kW	6	6	6
	Combination	kW	3+3	3+3	3+3
	Power input	Ph/V/Hz	1/230/50	1/230/50	1/230/50
Sound pressure level		dB(A)	31	31	31
Connecting pipe	Gas	inch(mm)	φ5/8(15.9)	φ5/8(15.9)	φ5/8(15.9)
	Liquid	inch(mm)	φ3/8(9.52)	φ3/8(9.52)	φ3/8(9.52)
Dimensions (W×D×H)	Outline	mm	900x500x324	900x500x324	900x500x324
	Packaged	mm	1043×608×395	1043×608×395	1043×608×395
Net weight/Gross weight		kg	57/66	57/66	57/66

Model			CH-HP12SINM(I)	CH-HP14SINM(I)	CH-HP16SINM(I)
Product Code			ER010N1160	ER010N1170	ER010N1180
Power Supply		V/Ph/Hz	380-415/3/50	380-415/3/50	380-415/3/50
Norminal input		W	6200	6200	6200
Leaving water temperature	Cooling*1	℃	7~25	7~25	7~25
	Cooling*2	℃	18~25	18~25	18~25
	Heating*1	℃	25~55(High temperature cycle)		
	Heating*2	℃	25~45(Low temperature cycle)		
Pump	Type	-	Water-cooled	Water-cooled	Water-cooled
	Nr. of speed	-	3	3	3
	Power input	W	200	200	200
	Water flow limit	LPM	12	12	12
Electric Heater	Operation	-	Automatic	Automatic	Automatic
	Steps	-	1	1	1
	Capacity	kW	6	6	6
	Combination	kW	6	6	6
	Power input	Ph/V/Hz	3/400/50	3/400/50	3/400/50
Sound pressure level		dB(A)	31	31	31
Connecting pipe	Gas	inch(mm)	φ5/8(15.9)	φ5/8(15.9)	φ5/8(15.9)
	Liquid	inch(mm)	φ3/8(9.52)	φ3/8(9.52)	φ3/8(9.52)
Dimensions (W×D×H)	Outline	mm	900x500x324	900x500x324	900x500x324
	Packaged	mm	1043×608×395	1043×608×395	1043×608×395
Net weight/Gross weight		kg	60/69	60/69	60/69

4.1.3 Water Tank (optional)

Models			WT200FH3EK	WT2002FH3EK	WT300FH3EK	WT3002FH3EK
Product Code			ER20000160	ER20000170	ER20000180	ER20000190
Models			WT200FH3EM	WT2002FH3EM	WT300FH3EM	WT3002FH3EM
Product Code			ER20000240	ER20000260	ER20000250	ER20000270
Water Tank Volume		L	200		300	
Electric Heater Power		W	3000			
Cool Water Inlet Pipe	Outer diameter	mm	DN15			
		inch	1/2			
	Screw thread spec		1/2″Female BSP			
Hot Water Outlet Pipe	Outer diameter	mm	DN15			
		inch	1/2			
	Screw thread spec		1/2″Female BSP			
Circulation Water Inlet/Outlet Pipe	Outer diameter	mm	/	DN20	/	DN20
		inch	/	3/4	/	3/4
	Screw thread spec		/	3/4″Female BSP	/	3/4″Female BSP
Water Inlet/ Outlet(Heat Pump) Pipe	Outer diameter	mm	DN20			
		inch	3/4			
	Screw thread spec		3/4″Female BSP			
Outline Dimension(ΦD×H)		mm	Φ540×1595		Φ620×1620	
Net Weight		kg	68	71	82	87

Note :

Tank is optional part, and the specific model of tank shall be selected according to local weather and professional suggestions.

4.2 Operation Range

Mode	Range of Outdoor Temperature(℃)
Heating	-20~35
Cooling	10~48
Water heating	-20~45

4.3 Electrical Data

Model	Power Supply	Leakage Switch	Minimum Sectional Area of Earth Wire	Minimum Sectional Area of Power Supply Wire
	V,Ph,Hz	(A)	(mm^2)	(mm^2)
CH-HP6.0SINK(I)	220-240V,~,50Hz	40	10	3×10
CH-HP8.0SINK(I)		50	10	3×10
CH-HP10SINK(I)		50	10	3×10
CH-HP6.0SINK(O)		16	1.5	3×1.5
CH-HP8.0SINK(O)		25	4	3×4
CH-HP10SINK(O)		25	4	3×4
CH-HP12SINK(I)		50	10	3×10
CH-HP14SINK(I)		50	10	3×10
CH-HP16SINK(I)		50	10	3×10
CH-HP12SINK(O)		32	6	3×6
CH-HP14SINK(O)		32	6	3×6
CH-HP16SINK(O)		32	6	3×6
CH-HP12SINM(I)	380-415V,3N~,50Hz	20	2.5	5×2.5
CH-HP14SINM(I)		20	2.5	5×2.5
CH-HP16SINM(I)		20	2.5	5×2.5
CH-HP12SINM(O)		16	1.5	5×1.5
CH-HP14SINM(O)		16	1.5	5×1.5
CH-HP16SINM(O)		16	1.5	5×1.5

Note:

① Leakage Switch is necessary for additional installation. If circuit breakers with leakage protection are in use, action response time must be less than 0.1 second, leakage circuit must be 30mA.

② The above selected power cable diameters are determined based on assumption of distance from the distribution cabinet to the unit less than 75m. If cables are laid out in a distance of 75m to 150m, diameter of power cable must be increased to a further grade.

③ The power supply must be of rated voltage of the unit and special electrical line for air-conditioning.

④ All electrical installation shall be carried out by professional technicians in accordance with the local laws and regulations.

⑤ Ensure safe grounding and the grounding wire shall be connected with the special grounding equipment of the building and must be installed by professional technicians.

⑥ The specifications of the breaker and power cable listed in the table above are determined based on the maximum power (maximum amps) of the unit.

⑦ The specifications of the power cable listed in the table above are applied to the conduit-guarded multi-wire copper cable (like, YJV XLPE insulated power cable) used at 40℃ and resistible to 90℃(see IEC 60364-5-52). If the working condition changes, they should be modified according to the related national standard.

⑧ The specifications of the breaker listed in the table above are applied to the breaker with the working temperature at 40℃. If the working condition changes, they should be modified according to the related national standard.

5 PIPING DIAGRAM

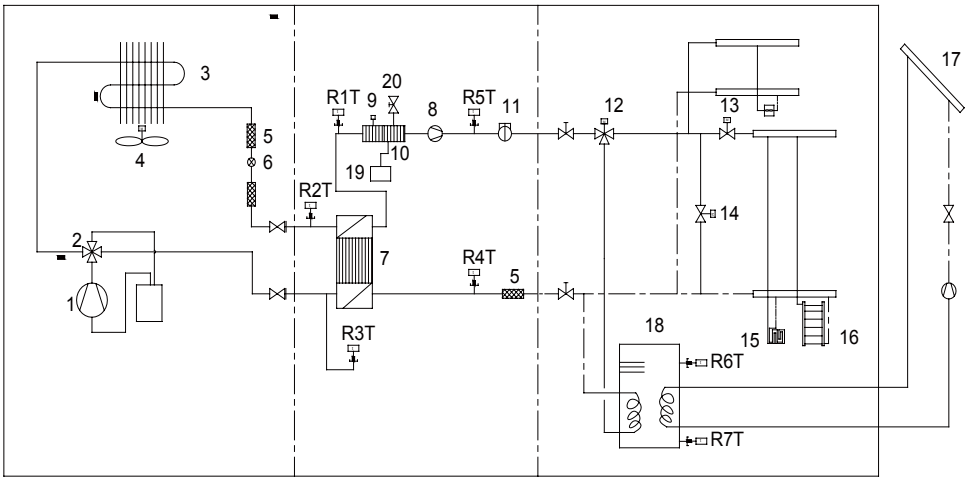

1 compressor
2 four-way valve
3 finned coil exchanger
4 fan motor
5 filter
6 electronic expansion valve
7 plate heat exchanger
8 pump
9 air-vent valve
10 electric heater
11 flow switch
12 3-way valve
13 2-way valve
14 by-pass valve
15 under-floor heating
16 radiator
17 other thermal system
18 water tank
19 expansion tank
20 safety valve
R1T plate outlet temperature sensor
R2T Liquid line temperature sensor
R3T gas line temperature sensor
R4T returning water temperature sensor
R5T leaving water temperature sensor
R6T water tank temperature sensor 1
R7T water tank temperature sensor 2

CONTROL

UNITS CONTROL

1 OPERATION FLOWCHART

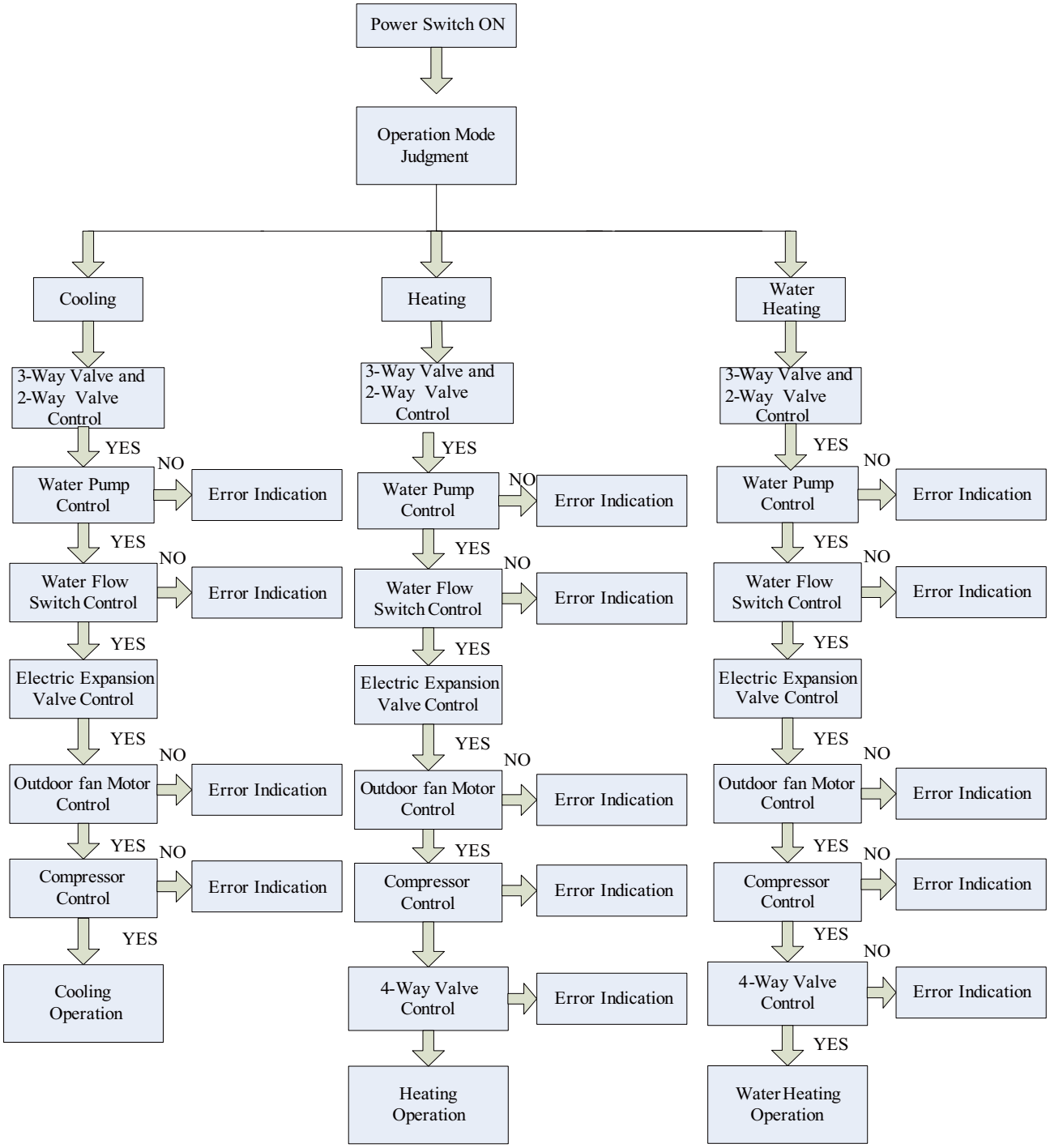

2 MAIN LOGIC

2.1 Defrosting Mode

2.1.1 The condition of start defrosting mode:

Under heating mode or water heating mode, if the accumulative running time of compressor is over the set interval time of defrosting(default 50min),and the defrosting temperature(outdoor unit heat exchanger temperature) is lower than the set starting temperature(default -4℃),the unit will start running defrosting, and the 4-way valve will shut off and the outdoor fan will stop.

2.1.2 The condition of quit defrosting mode:

Under defrosting mode, if the continual defrosting time is over the set continual time of defrosting(default 10min) ,or the defrosting temperature is over the set stopping temperature(default 15℃) ,the unit will restart running heating mode, and the 4-way valve will turn on and the outdoor fan will run.

2.2 Water-side Auto Anti-freezing in Winter

In low temperature, When the compressor stops (including normal or abnormal stop of the unit), if auxiliary electric heater water-out temperature is lower than 5℃, 30s later the water pump will automatically operate and 120s later the compressor operates.

When outlet water temperature is less than 20℃,the unit will operate while it will stop when the outlet water temperature is more than 20℃.

However, if there is malfunction of the unit, anti-freezing operation will be started by indoor electric heater (two sets).

2.3 Control of Heating Tape on Chassis

When heating operation starts in low temperature, in order to prevent the condensation water generated by defrosting from freezing in chassis, which will incur malfunction of drainage, the heating tape is installed in chassis. If the ambient temperature is lower than 0℃, when the compressor operates, electric heating will operate; if the ambient temperature is higher than 2℃ or compressor stops, the electric heating will stop.

2.4 Control of Fan

In cooling, the outdoor fan will adjust fan speed according to pressure detected by high pressure sensor.

In heating or water heating, the fan will adjust fan speed according to ambient temp.

2.5 Control of Compressor

Output capacity of compressor is adjusted according to the comparison of current outlet water temperature and setting outlet water temperature or the comparison of indoor ambient temperature and setting indoor temperature;

The output capacity will not be adjusted within 6 min after the compressor operates; once compressor stops, it can’t be started within at least 3 min.

2.6 Control of Electric Expansion Valve

In heating or water heating operation, electric expansion valve is adjusted according to superheat degree of outdoor heat exchanger.

In cooling operation, electric expansion valve is adjusted according to superheat degree of plate-type heat exchanger.

Electric expansion valve will not be adjusted within 3 min after the unit operates.

3 WIRED CONTROLLER

3.1 Dimension

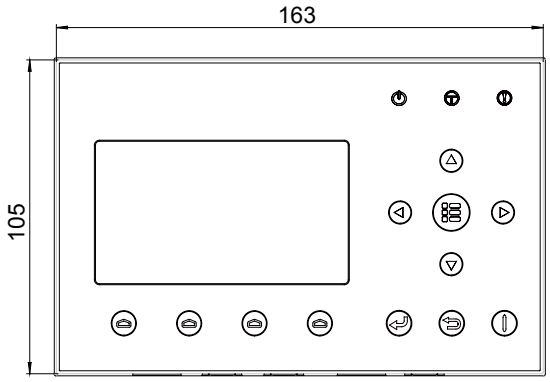

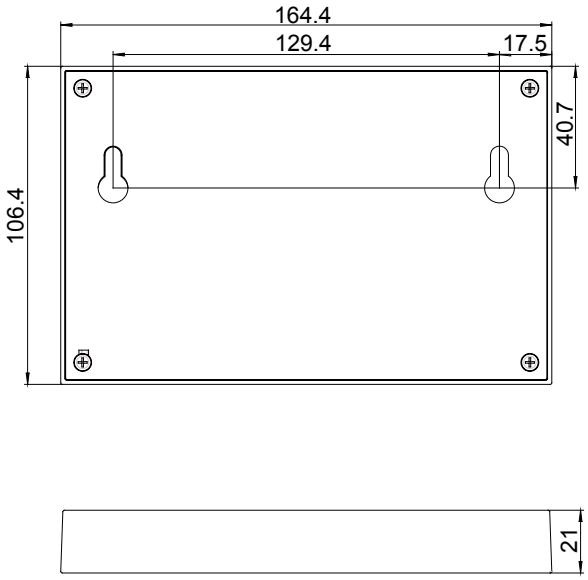

3.2 Function

3.2.1 External View

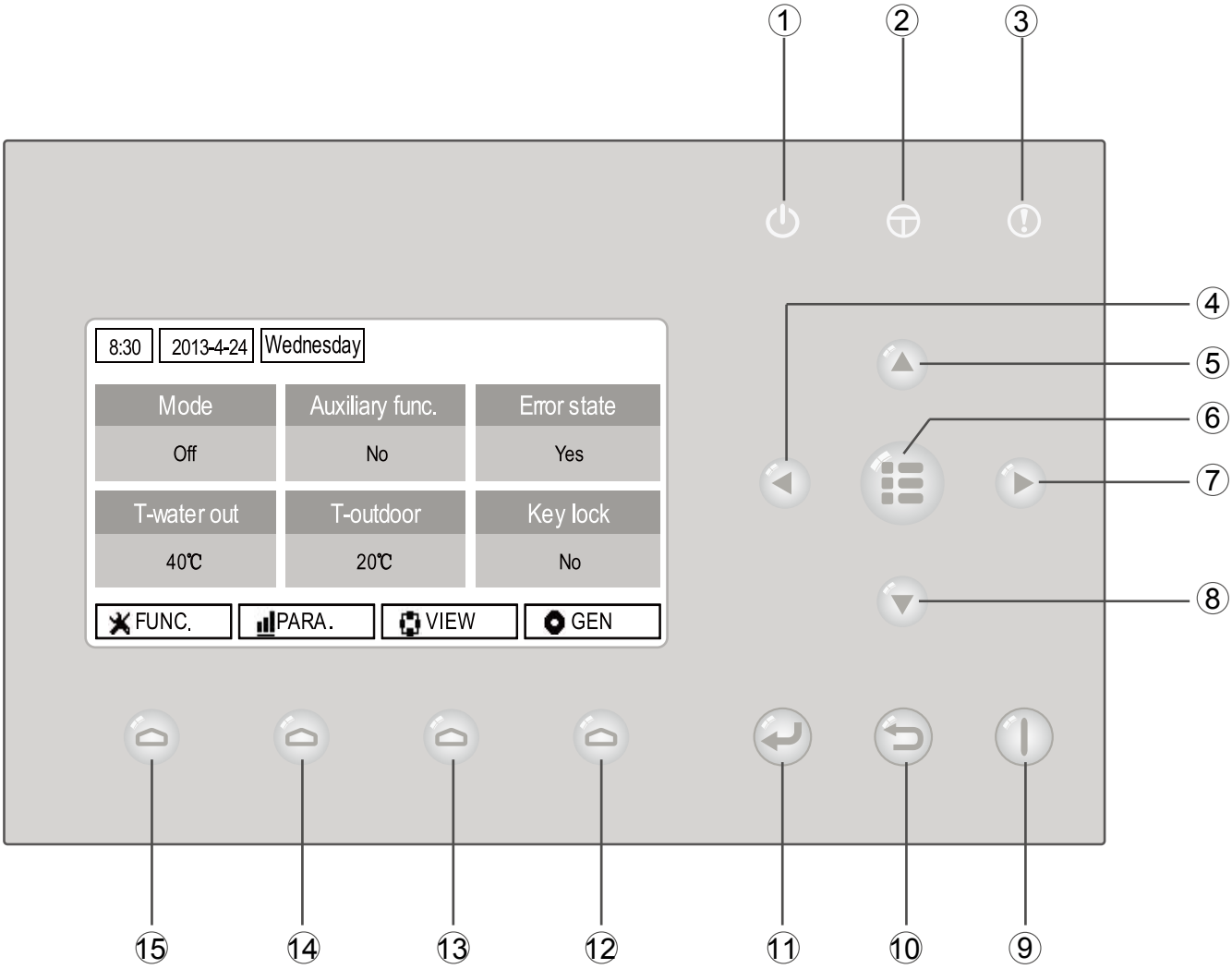

(This effect drawing is just for reference)

No.	Symbol	Description	No.	Symbol	Description
①		Running indicating LED	⑨		ON/OFF
②		Power indicating LED	⑩		Cancel/Return key
③		Error indicating LED	⑪		OK key
④		Left key	⑫		Function key no. 4
⑤		Up key	⑬		Function key no. 3
⑥		Menu key	⑭		Function key no. 2
⑦		Right key	⑮		Function key no. 1
⑧		Down key			

3.2.2 Standby Page and Homepage

Standby Page

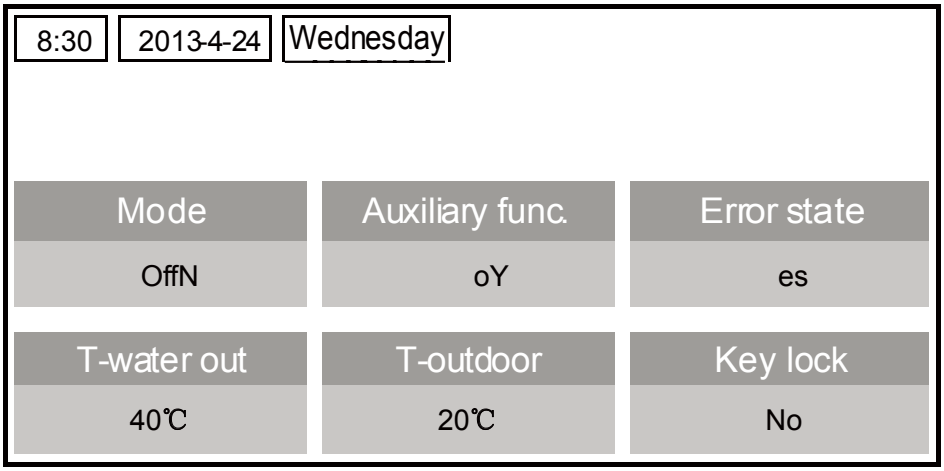

Home Page

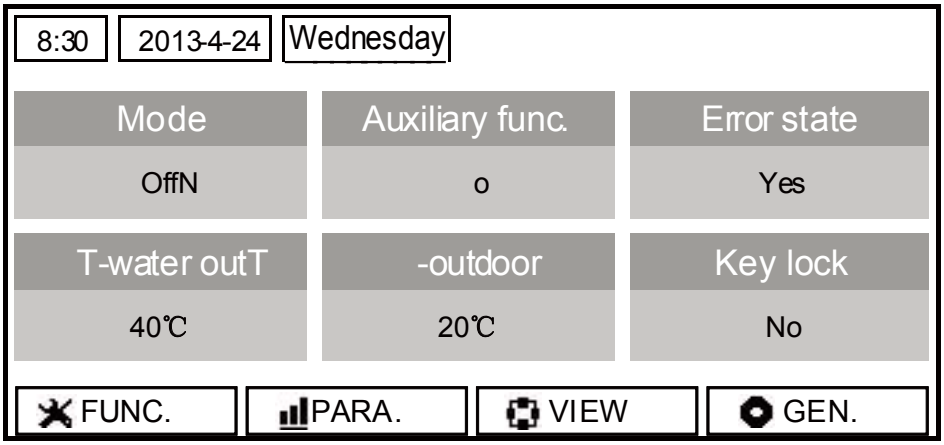

No.	Item	Functional Description
1	Mode	It is intended to access to the actual running mode.
2	Auxiliary Func.	It indicates the auxiliary function note 1.
3	Error state	It indicates if there is any error.
4	T-water out	It indicates the actual leaving water temperature.
5	T-outdoor	It indicates the actual outdoor environment temperature.
6	Key lock	It indicates if the key lock is activated or deactivated.

Note:

it includes the "**Sanitize mode**", "**Quiet**" mode, "**Auto**" mode, "**Floor debug**" mode, "**Emergen.mode**", "**Holiday mode**", "**Forced Cooling**" mode, "**Forced Heating**" mode, and "**Debug**" mode.

3.2.3 Keys

No.	Item	Functional Description
1	ON/OFF key	It is intended to turn on or off the unit.
2	OK key	It is intended to save the setting or go to the submenu.
3	Cancel/Return key	It is intended to go to the higher level menu.
4	Menu key	It is intended to call out the main menu or back to the homepage.
5	Left/Right key	It is intended to move the cursor Left/Right.
6	Up/Down key	It is intended to modify the setting state or value of the selected parameter.
7	Function keys (4)	It is intended to perform different functions at difference pages.

3.2.4 Indicating LEDs

No.	Item	Functional Description
1	On/Off indicating LED (green)	It will light on/off when the unit is turned on/off.
2	Power indicating LED (yellow)	It will light on/off when the unit is powered on/off.
3	Fault indicating LED (red)	It will light on when some fault occurs.

3.3 Operation Instruction

3.3.1 On/Off

At the homepage, by pressing the ON/OFF key, the unit will be turned on/off.

When the unit is ON, the green indicating LED located at the upper right of the control will light on. When the unit is OFF, the green indicating LED will light off.

[Notes]

① The unit is defaulted to be OFF when energized for the first time.

② The ON/OFF key operation works only at the home page and the standby page.

③ When the "**Holiday mode**" or the "**Emergen.mode**" is activated, the ON/OFF key operation will become ineffective.

④ When the "**Forced Heating**" or "**Forced Cooling**" is activated, it will be deactivated by pressing the "ON/OFF" key, and then press the ON/OFF key again to start the unit.

⑤ ON/OFF operation will be memorized by setting "**Memory**" to be "**On**" at the "**GEN**." setting page. That is, in case of power failure the unit will resume running upon power recovery. Once "**Memory**" is set to be "**Off**", in case of power failure the unit will keep "**Off**" upon power recovery.

⑥ At the home page, the ON/OFF key is intended to turn on/off the unit if applicable. The Function keys no.1 to no.4 are corresponding to "**FUNC.**", "**PAPA**", "**VIEW**" and "**GEN.**" setting pages respectively.

⑦ At the standby page, the Menu key is used to back to the homepage, the ON/OFF key is used to turn on/off the unit if applicable, and all other key operations are ineffective.

⑧ The control will return automatically to the homepage where there is no any key operation in 10 consecutive minutes.

3.3.2 Function Setting

1) At the homepage, by pressing the Function key no. 1, the control will access to the **FUNCTION** page 1, as shown in the figure below.

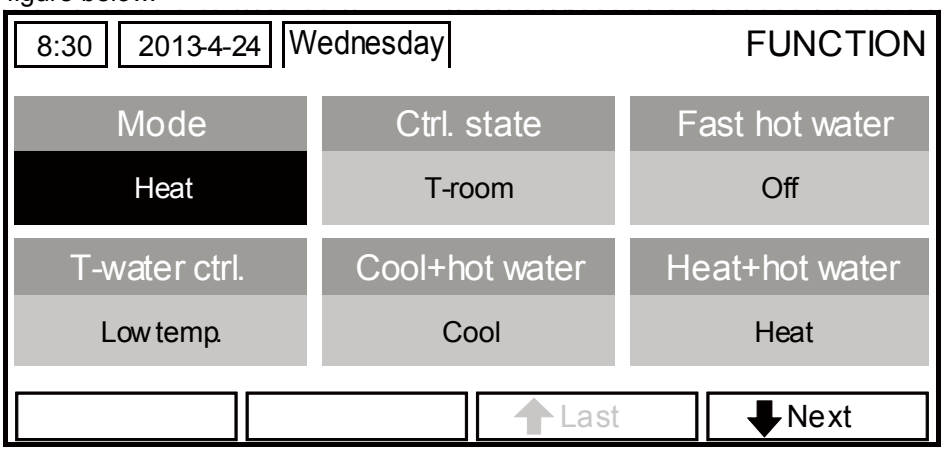

FUNCTION page 1

2) At the **FUNCTION** page, by the Right/Left key, the desired function option can be selected, and by the Up/Down key, the setting of the current function option can be modified. The function key no. 3 or no. 4 can be used for switch pages. After the setting is finished, by pressing the Menu key, the control will back to the homepage, or by pressing the Return key the control will back to the higher level menu.

[Notes]

Move the cursor to the desired option and “Enter” will be displayed at the lower left side of the LCD, reminding you that you are allowed to access to the submenu by pressing the OK key.

At the **FUNCTION** page, when the setting of some function option is changed and needs to be memorized, then in case of power failure it will be saved automatically and resume upon power recovery.

Function Settings

No.	Full Name	Displayed Name	Range	Default	Remarks
1	Running mode setting	Mode	Cool/Heat/ Hot water/ Cool+Hot water/ Heat+Hot water	Heat	When the water tank is unavailable, then only “Cool” and “Heat” are included in the range.
2	Control state	Ctrl. state	T-water out /T-room	T-water out	“T-Room” is available only when “Remote Sensor” is set to “With”.
3	Fast hot water	Fast hot water	On/Off	Off	When the water tank is unavailable, this function will be reserved, and the LCD will display ‘Reserved’.
4	Water out temperature control	T-water ctrl.	High temp. /Low temp.	Low temp.	/
5	Cool+hot water	Cool+hot water	Cool/Hot water	Cool	
6	Heat+hot water	Heat+hot water	Heat/Hot water	Heat	When the water tank is unavailable, this function will be reserved, and the LCD will display ‘Reserved’.
7	Quiet mode	Quiet mode	On/Off	Off	/
8	Quiet timer	Quiet timer	On/Off	Off	/
9	Auto mode	Auto mode	On/Off	Off	/
10	Holidayrelease	Holidayrelease	On/Off	Off	/
11	Sanitize	Sanitize	On/Off	Off	When the water tank is unavailable, this function will be reserved, and the LCD will display ‘Reserved’.
12	Weekly timer	Weekly timer	On/Off	Off	/
13	Clock timer	Clock timer	On/Off	Off	/
14	Temperature timer	Temp. timer	On/Off	Off	/
15	Floor debug	Floor debug	On/Off	Off	/
16	Emergency mode	Emergen. mode	On/Off	Off	/
17	Holiday mode	Holiday mode	On/Off	Off	/
18	Thermostat	Thermostat	With/Without	Without	/
19	IDU heater	IDU heater	1/2/Off	1	/
20	Other heater	Other heater	With/Without	Without	/
21	Chassis heater	Chassis heater	On/Off	On	/
22	Water tank	Water tank	With/Without	Without	/
23	Tank sensor	Tank sensor	1/2	2	When the water tank is unavailable, this function will be reserved,and the LCD will display ‘Reserved’ .

24	Solar heater	Solar heater	With/Without	Without	/
25	FCU	FCU	With/Without	Without	/
26	Remote sensor	Remote sensor	With/Without	Without	When it is set to “Without”, the “Control state” will be automatically changed to “T-water out”.
27	Air removal	Air removal	On/Off	Off	/
28	Address	Address	[0~125] [127~253]	0	/
29	Doorguard	Doorguard	On/Off	Off	/

3.3.2.1 Mode

At the equipment OFF state, access to the **FUNCTION** page and then move through the Left/Right key the cursor to the “**Mode**” whose characters will be reversed, then press the Up/Down key to modify its setting.

[Notes]

① The “**Heat**” mode is defaulted when the unit is energized for the first time.

② The running mode is allowed to be changed only when the unit is not in operation. If it is done with the unit being on, a window will pop up, warning “please turn off the system first”.

③ When the water tank is disabled, only the ‘**Heat**” or the “**Cool**” mode is allowed.

④ When the water tank is enabled, “**Cool**”, “**Heat**”, “**Hot water**”, “**Cool+hot waterr**”, “**Heat+hot water**” is allowed.

⑤ For the heat pump, the “**Cool**” mode is allowed; for the heating only unit, “**Cool+ Hot water**” and “**Cool**” are unallowable.

⑥ This setting can be memorized upon power failure.

3.3.2.2 Control State (Ctrl. state)

Go to the **FUNCTION** page and locate **Ctrl. state**, then, configure it through the Up/Down key.

[Notes]

① If “**Remote sensor**” is set to “**With**”, “**T-out water**” and “**T-room**” are available. While if “**Remote Sensor**” is set to “**Without**”, only “**T-out water**” is selectable.

② This setting will be memorized upon power failure.

3.3.2.3 Fast Hot Water

Go to the **FUNCTION** page and locate “**Fast hot water**”, then, configure it through the Up/Down key, “**On**” or “**Off**”.

[Notes]

① It works only when “**Water tank**” is set to “**With**”.

② This setting will be memorized upon power failure.

3.3.2.4 T-water Ctrl (Water Temperature Control for Heating)

Go to the **FUNCTION** page and locate “**T-water ctrl.**”, then, configure it through the Up/Down key, “**High temp.**” or “**Low temp.**”.

[Notes]

① When this setting is changed, the following parameters will return to the default values.

Water out temperature for heating	WOT-Heat	45℃/113℉[High] 35℃/95℉[Low]
Upper limit water-out temperature at the auto mode for heating	Upper WT-Heat	48℃/118℉[High] 35℃/95℉[Low]
Lower limit water-out temperature at the auto mode for heating	Lower WT-Heat	40℃/104℉[High] 29℃/84℉[Low]

② This setting will be memorized upon power failure.

3.3.2.5 Cool + Hot water

Go to the **FUNCTION** page and locate “**Cool+hot water**”, then, configure it through the Up/Down key, “**Cool**” or “**Hot water**”.

[Notes]

① “**Hot water**” will take precedence only when “**Water tank**” is available, other it will tell “**Reserved**”.

② This setting will be memorized upon power failure.

3.3.2.6 Heat + Hot water

Go to the **FUNCTION** page and locate **Heat+hot water**, then, configure it through the Up/Down key, “**Heat**” or “**Hot water**”.

[Notes]

① "**Hot water**" will take precedence only when "**Water tank**" is available, other it will tell "**Reserved**".

② This setting will be memorized upon power failure.

3.3.2.7 Quiet Mode

Go to the **FUNCTION** page and locate "**Quiet mode**", then, configure it through the Up/Down key, "**On**" or "**Off**".

[Notes]

① It can be set to "**On**" or "**Off**" no matter if the unit is in operation or not.

② Once it is activated, it should be deactivated manually or by **Quiet Timer**.

③ It will not memorized and defaulted to be off upon power failure.

④ It will be deactivated when the unit is turned off.

3.3.2.8 Quiet Timer

1) Go to the **FUNCTION** page and locate **Quiet timer**, then, access to the **QUIET TIMER** setting page.

2) At the **QUIET TIMER** setting page, select "**Start time**" or "**End time**" through the Left/Right keys and then configure the desired time through the Up/Down keys.

3) When the mode setting is finished, then by pressing "Save", a pop-up window will pop up to remind if you are determined to save this setting. If so, press the "OK" key. If not, press the "Cancel" key to not save this setting.

4) When the setting is saved, the control then will back to the **FUNCTION** page and the cursor will be where the "**Quiet timer**" option is, then by the Up/Down key, it can be set to be "**On**" or "**Off**".

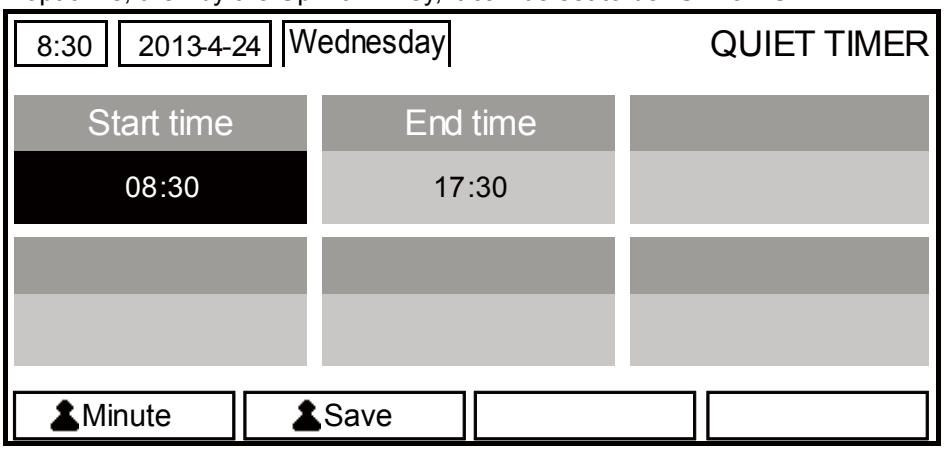

[Notes]

① Once it is activated, it should be deactivated manually.

② It will not be memorized and be defaulted to be off upon power failure.

③ The saved "Start time" and "End time" will be memorized upon power failure.

④ It is configurable no matter if the unit is in operation or not.

3.3.2.9 Auto Mode

Go to the **FUNCTION** page and locate **Auto mode**, then, configure it through the Up/Down key, "**On**" or "**Off**".

[Notes]

① Once it is activated, it should be deactivated manually.

② It will be defaulted to be off upon power failure.

③ At the "Parameter View" page, it is able to check the set point at the Auto mode.

④ When it is activated, it is allowed to set the room temperature but the set point does not take effective. However, when it is deactivated, the unit will run according to this set point.

⑤ It can be set to "On" or "Off" no matter if the unit is in operation or not, but be activated only when the unit is in operation.

⑥ This mode works only for the air conditioning function.

3.3.2.10 Holiday Release

Go to the **FUNCTION** page and locate "**Holiday release**", then, configure it through the Up/Down key, "**On**" or "**Off**".

[Notes]

① When it is activated, at the **WEEKLY TIMER** page, it is able to set some week day to "**Holiday release**". In this case, the "**Weekly timer**" in this day is ineffective unless it is set to "**Effective**" manually.

② This setting will be memorized upon power failure.

3.3.2.11 Sanitize

1) At the **FUNCTION** page, locate "**Sanitize**", and then access to the **SANITIZE** setting page by pressing the OK key.

2) At the **SANITIZE** setting page, select "**Set clock**", "**Set week**" or "**Set temp**" through the Left/Right key and then modify the corresponding setting through the Up/Down key.

3) When the mode setting is finished, then by pressing "**Save**", a pop-up window will pop up to remind if you are determined to save this setting. If so, press the OK key. If not, press the Cancel key to not save this setting.

4) When the setting is saved, the control then will back to the **FUNCTION** page and the cursor will be where the "**Sanitize timer**" is, then by the Up/Down key, it can be set to "**On**" or "**Off**".

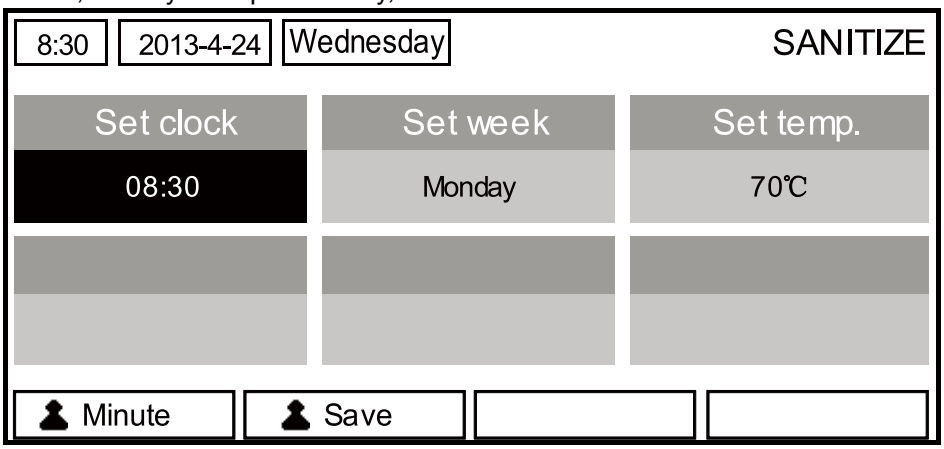

[Notes]

① It can be activated only when the "**Water tank**" is set to "**With**".

② It can be set to "**On**" or "**Off**" no matter if the unit is in operation or not

③ When "**Sanitize**" is set to "On", if you intend to set the "**Emergen. mode**", "**Holiday mode**", "**Floor Debug**", then a window will pop up, warning "**Please disable the Sanitize Mode!**".

④ It can be set to "**On**" or "**Off**" no matter if the unit is in operation or not, and "**Hot water**" mode always takes precedence.

⑤ When Sanitize is activated, "**Sanitize**" will show on the home page of the control until this operation is finished. If this operation fails, "**Sanitize fails**" will show. In this case, by pressing any key, "**Sanitize failure**" will be cleared or it will be always there.

⑥ When Sanitize is activated, it will quit upon "**Communication error with the indoor unit**" or "**Water tank heater error**".

3.3.2.12 Weekly Timer

1) At the homepage, by pressing the Function key access to the **FUNCTION** page, and then locate where "**Weekly timer**" is by switching pages, after that, press OK key to go to the **WEEKLY TIMER** setting page.

2) At the **WEEKLY TIMER** setting page, by the Right/Left key it is able to select the desired week day and then by the Up/Down key to set this day, "√", "×" or "Holiday", as shown in the figure below. When this setting is finished, press OK key to go to this day's setting page.

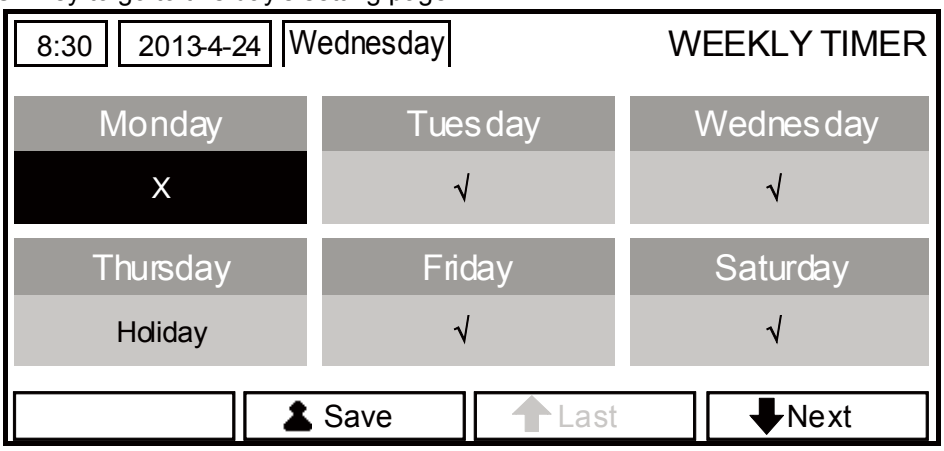

3) At the week day's setting page, it is allowed to set the running mode (Mode), temperature set point (WT-HEAT), and water tank temperature (T-Water Tank). The running mode includes "**Heat**", "**Cool**", "**Hot water**", "**Heat+ hot water**", "**Cool+ hot water**" (the last three ones are available only when "Water tank" is set to "With". There are totally five periods for each day, and each period can be set to "√"or "×". Besides, it is able to set the

"**Start time**" and "**End time**" for each period, as shown in the figure below.

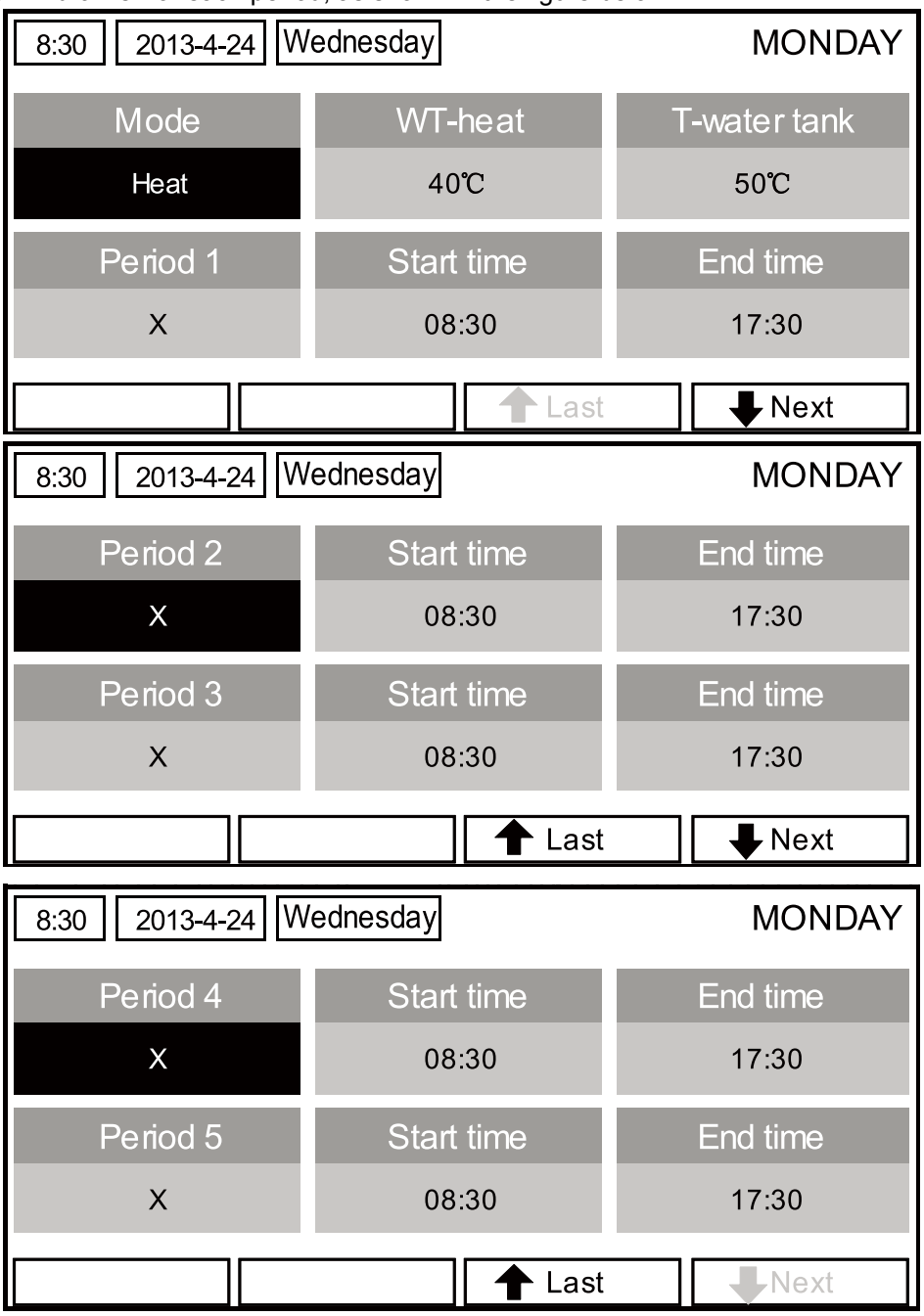

4) When above settings are finished, pressing the Return key and then pressing "**Save**", a pop-up window will pop up to remind if you are determined to save these settings. If so, press the OK key. If not, press the Return key to not save these settings.

5) In this case, finally by pressing the Up key, "**Weekly timer**" will be activated.

[Notes]

① Totally five periods are allowed to be set for each time. For each period, "**Start time**" must be earlier than "**End time**". Similarly, the preceding period must be earlier than its following period.

② When "**Weekly timer**" has been set successfully, by changing "**FCU**", "**Water tank**", "**Ctrl state**", or "**T-water ctrl**", then the temperature set point for "**Weekly time**r" will be automatically changed to the set point of last setting. For instance, if "**Heat**" is set for Monday of "**Weekly timer**", "**FCU**" is set to "**With**" and the "**T-water out**" is 20℃, by resetting "**FCU**" to "**Without**", then "**T-water out**" will be the value of last setting. In this case, if FCU is disabled for last setting, then "**T-water out**" will be the default value (18℃).

③ At the "**WEEKLY TIMER**" setting page there are totally three setting types for each day

"√": it indicates once the Week Timer is activated, the timer on this day is effective and will not be affected by the "Holiday" mode.

"×": it indicates even if the Week Timer is activated, the timer on this day is ineffective.

"**Holiday**": it indicates when the Week Timer is activated but "**Holiday**" is not activated, then the timer on this day is effective; when "Holiday" is also activated, the timer on this day is ineffective.

④ When "**Weekly timer**" has already been set and the concerned modes include "**Hot water**", if resetting "**Water tank**" from "**With**" to "**Without**", then "**Hot water**" mode will be automatically changed to "**Heat**", "**Cool+hot water**"/ "**Heat+hot water**" changed to "**Cool**"/ "**Heat**".

⑤ Temperature Setpoint

The control is able to decide the temperature type and temperature range based on the current "**Clock Timer**", "**FCU**", "**T-water Ctrl.**", and "**Ctrl. state**" settings. See the followings for more details.

If the set mode is "**Hot water**", the temperature set point shows nothing, indicating there is no need to set "**T-water out**" and "**T-room**" but only "**T- tank**". If the set mode "**Cool**" or "**Heat**", then water tank temperature box will show nothing, indicating there is no need to set "**T-tank**".

Ctrl. state	Set Mode	Object	Range		Default	Accuracy
T-water out	Cool	Water out temperature for cooling(**WT-cool**)	7-25℃ (With FCU)	18-25℃ (Without FCU)	7℃ (With FCU) 18℃ (Without FCU)	1℃
	Heat	Water out temperature for heating(**WT-heat**)	High temp.	25-55℃	45℃	1℃
			Low temp.	25-45℃	35℃	1℃
T-room	Cool	Room temperature for cooling(**RT-cool**)	18-30℃		20℃	1℃
	Heat	Room temperature for heating(**RT-heat**)	18-30℃		26℃	1℃

3.3.2.13 Clock Timer

1) At the homepage, by pressing the Function no.1 key access to the **FUNCTION** page, and then locate where "**Clock timer**" is, after that, press OK key to go to the **COLCK TIMER** setting page.

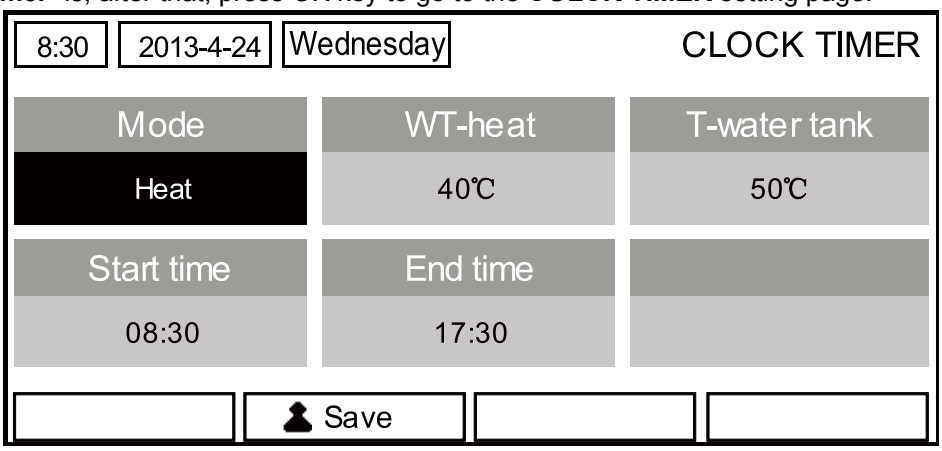

2) At the **CLOCK TIMER** setting page, by the Left/Right key select the desired parameter and then by the Up/Down key configure it.

3) When this setting is concerned about time value, by pressing the Function key no. 1 alternately set the hour or minute values, and by pressing the Up/Down key increase or decrease the corresponding value which will be continuously changed by pressing and holding the key.

(Unless otherwise specified, all timer settings follow the similar way.)

4) When the setting is finished, save it by pressing the Function key no. 2, or this setting without being saved is ineffective.

5) When the setting has been saved, activate the "**Clock Timer**" at the **FUNCTION** page.

[Notes]

① When "**Weekly timer**" and "**Clock timer**" settings are performed at the same time, the latter takes precedence.

② When the water tank is available, the allowed running modes include "**Heat**", "**Cool**", "**Heat+ hot water**", "**Cool+hot water**", and "**Hot water**".

③ When the water tank is unavailable, the allowed running modes only include "**Heat**" and "**Cool**".

④ When "**Clock timer**" has already been set and the concerned modes include "**Hot water**", if resetting "**Water tank**" from "**With**" to "**Without**", then "**Hot water**" mode will be automatically changed to "**Heat**", "**Cool+hot water**"/ "**Heat+hot water**" changed to "**Cool**"/ "**Heat**".

Full Name	Displayed Name	Range	Default
Set Mode	Mode	Cool/ Heat/ Hot water/ Cool+hot water/ Heat+hot water	Heat
Water out temperature for cooling / Room temperature for cooling / Water out temperature for heating / Room temperature for heating	WT-heat/ RT-heat/ WT-cool/ RT-cool	Refer to the temperature setting range of "Weekly Timer".	35℃
Tank temperature	T-water tank	40~80℃/104~176℉	50℃/122℉
Start time	Start time	00:00-23:59	08:30
End time	End time	00:00-23:59	17:30

3.3.2.14 Temp. Timer

1) At the homepage, by pressing the Function key access to the **FUNCTION** page, and then locate where "**Temp timer**" is, after that, press OK key to go to the **TEMP TIMER** setting page.

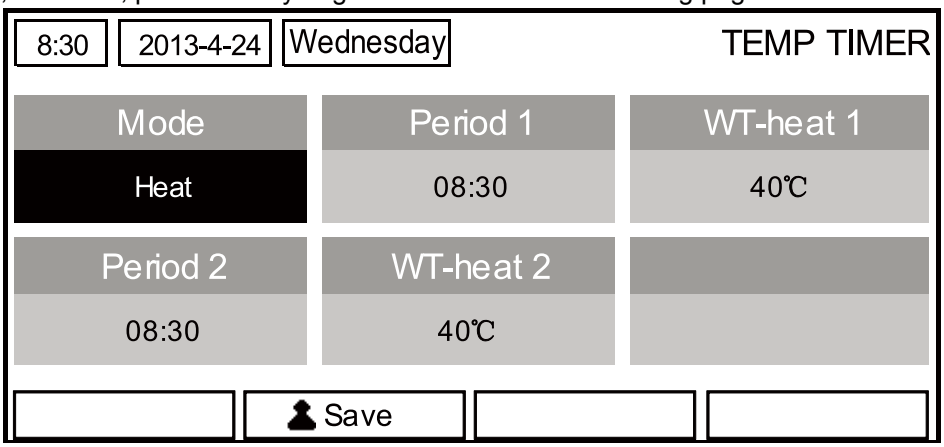

2) At the **TEMP TIMER** setting page, by the Left/Right key select the desired parameter and then by the Up/Down key configure it. The configurable parameters include "**Mode**", "**Period 1**", "**WT-HEAT 1**", "**Period 2**" and "**WT-HEAT 2**".

4) When the setting is finished, save it by pressing the Function key no. 2, or this setting without being saved is ineffective.

5) When the setting has been saved, activate the "**Temp. timer**" at the **FUNCTION** page.

[Notes]

① When "**Weekly timer**", "**Clock timer**", and "**Temp. timer**" settings are performed at the same time, the last one takes precedence.

② This function works only when the unit is in operation.

③ The allowed running modes include "**Heat**" and "**Cool**"

④ When the start time of "**Period 2**" is equal to that of "**Period 1**", then the set point of "**Period 2**" takes precedence.

⑤ **TEMP. TIMER** is judged by the timer value.

⑥ During the setting, the temperature set point which is set manually always takes precedence.

Full Name	Displayed Name	Range	Default
Set Mode	Mode	Cool/Heat	Heat
Period 1 running time	Period 1	00:00-23:59	08:30
Water out temperature for cooling / Room temperature for cooling / Water out temperature for heating / Room temperature for heating	WT-heat 1/ RT-heat 1/ WT-cool 1/ RT-cool 1	Refer to the temperature setting range of "Weekly Timer".	35℃/95℉
Period 1 running time	Period 2	00:00-23:59	17:30
Water out temperature for cooling / Room temperature for cooling / Water out temperature for heating / Room temperature for heating	WT-heat 2/ RT-heat 2/ WT-cool 2/ RT-cool 2	Refer to the temperature setting range of "Weekly Timer".	35℃/95℉

3.3.2.15 Floor Debug

1) At the homepage, by pressing the Function key access to the **FUNCTION** page, and then locate where "**Floor debug**" is, after that, press OK key to go to the **FLOOR DEBUG** setting page.

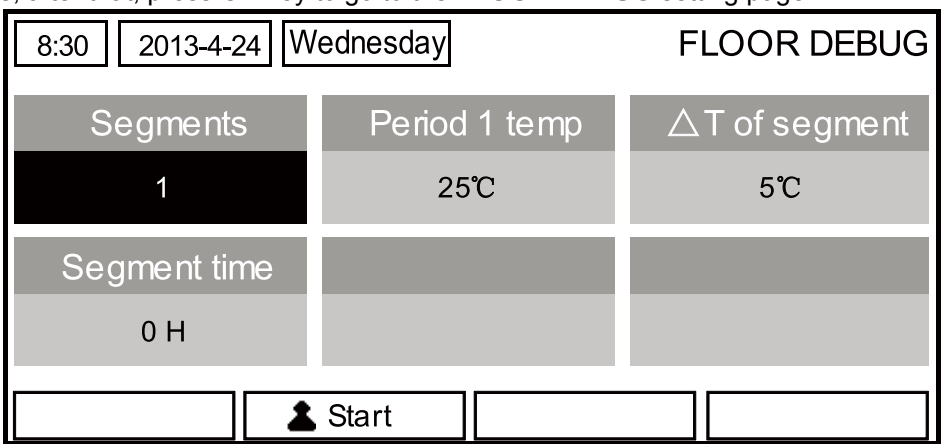

2) At the **FLOOR DEBUG** setting page, by the Left/Right key select the desired parameter and then by the Up/Down key configure it. The configurable parameters include "**Segments**", "**Period 1 temp**", "**ΔT of segment**", and "**Segment time**", as listed in the following table..

No.	Full Name	Displayed Name	Range	Default	Accuracy
1	Segments for floor debug	Segments	1~10	1	1
2	First temperature for floor debug	Period 1 temp	25~35℃/ 77~95℉	25℃/77℉	1℃/1℉
3	Segment temperature difference for floor debug	ΔT of segment	2~10℃/ 36~50℉	5℃/41℉	1℃/1℉
4	Segments duration for floor debug	Segment time	0~72H	0	12H

3) After the above setting is finished, by pressing the function key no. 2 activate this function and a dialog box will pop up, reminding "**Start the Floor Debug Mode now?**". If so, press the "OK" key. Once "**Floor debug**" has been activated, by pressing the function key no. 2, a dialog box also will pop up, reminding "**Stop the Floor Debug Mode now?**" If so, press the OK key; if not, press "**Cancel**" to go on.

[Notes]

① This function can be activated only when the unit is OFF. When it is intended to activate this function with the unit being ON, a dialog box will pop up, warning "**Please turn off the system first!**".

② When this function has been activated, it is unable to turn on or off the unit. In this case, when pressing the ON/OFF key, a dialog will pop up, warning "**Please disable the Floor Debug Mode!**".

③ When this function has been set successfully, "**Timer week**", "**Clock timer**" and "**Temp timer**" will be deactivated.

④ "When "**Floor debug**" mode has been activated, "**Emergen.mode**", "**Sanitize**", "**Holiday mode**" is not

allowed to be activated, or a dialog box will pop up, warning "**Please disable the Floor Debug Mode!**".

⑤ Upon power failure, this function will be OFF and runtime will be cleared.

⑥ At the **FIOOR DEBUG** setting page, the control will remain at this page and never back to the homepage unless pressing the Return key or Menu key.

⑦ When this function is activated, it is allowed to check the target temperature and runtime of "Floor Debug" at the Parameter View page.

⑧ Before activating "**Floor debug**", please make sure each period for "**Floor debug**" is not zero, or a dialog box will pop up, warning "**Wrong Floor Debug time!**". It will resume only by pressing "OK" and then correcting the time.

3.3.2.16 Emergency Mode (Emergen. Mode)

1) Set "**Mode**" to "**Heat**" or "**Hot water**" at the Parameter Set page

2) Then, switch pages to go the page where "**Emergen. mode**", locate it by the Left/Right key, and configure it to "**On**" or "**Off**" by the Up/Down key.

3) When it is set to "**On**", "**Auxiliary func.**" at the homepage will be replaced by "**Emergen. Mode**".

4) When it is set to "**On**" but the running mode is not "**Heat**" or "**Hot water**", a dialog will pop up, warning "**Wrong running mode!**". In this case, by pressing the OK key, the control will go to the Mode setting page, or by pressing the Cancel key, the control will return to the "**Emergen. Mode**" page.

[Notes]

① When the unit is performing "**Heat**" at the Emergency mode, if there is water flow switch protection, IDU assistant heater welding protection, or leaving water temperature sensor error, the Emergency mode will quit and will not be allowed to be activated.

② When the unit is performing "**Hot water**" at the Emergency mode, if there is water tank heater welding protection, or water tank temperature sensor error, the Emergency mode will quit and will not be allowed to be activated.

③ At the Emergency mode, the ON/OFF key operation will be disabled; the running mode will not be allowed to be changed; the Quiet and Auto modes cannot be deactivated; "**Weekly timer**", "**Clock timer**" and "**Temp timer**" also cannot be activated, or will be deactivated if being activated.

④ At the Emergency mode, commands from the Thermostat is ineffective.

⑤ At the Emergency mode, only one running mode between "**Heat**" and "**Hot water**" is allowed.

⑥ This function can be activated only when the unit is OFF, or a dialog box will pop up, warning "**Please turn off the system first!**"

⑦ Under the Emergency mode, "**Floor debug**", "**Sanitize**", "**Holiday mode**", cannot be activated, or a dialog box will pop up, warning " **Please disable the Emergency Mode!**".

⑧ Upon power failure, the "**Emergen. mode**" will be defaulted to be "**Off**".

3.3.2.17 Holiday Mode

1) Locate where "**Holiday mode**" at the **FUNCTION** page

2) Set Holiday to "**On**" or "**Off**" by the Up/Down key.

[Notes]

① At the holiday mode, "**Mode**" setting of the control and On/Off key operation both are disabled.

② When it is activated, "**Weekly timer**", "**Clock timer**" or "**Temp timer**" will be deactivated.

③ At the holiday mode, when "**T-Room**" is adopted, the temperature set point should be 15℃; when "**T-Out water**" is adopted, then the temperature set point should be 30℃.

④ It will quit when the thermostat effectively works ("**Cool**" or "**OFF**" operation).

⑤ When this setting is saved successfully, it will be memorized upon power failure.

⑥ This function can be activated only at the "**Heat**" mode and with the unit turned off. When it is done with the unit turned on, a prompt dialog box will pop up, warning "**Please turn off the system first!**"; or when it is done at other modes except the "**Heat**" Mode with the unit turned off, also a prompt dialog box will pop up, warning "**Wrong running mode!**".

⑦ When it is activated, the ON/OFF key operation is disabled, or a dialog box will pop up, warning "**Please disable the Holiday Mode !**".

⑧ Under the Holiday mode, "**Floor debug**", "**Sanitize**", "**Emergen. mode**" cannot be activated, or a dialog box will pop up, warning "**Please disable the Holiday Mode !**".

3.3.2.18 Thermostat

1) Locate where "**Thermostat**" is at the **FUNCTION** page

2) By pressing the Up/Down key, Thermostat can be set to "**On**" or "**Off**". When it is "**On**", the control follows the running mode of the thermostat and is not allowed to set the running mode; when it is "**Off**", the control follows the running mode set by itself.

[Notes]

① When "**Floor debug**" or "**Emergen. Mode**" is activated, then the control will not receive signals from the thermostat.

② If "Thermostat" is set to "**On**", the control will automatically disable some functions concerning timer, and run in accordance with the mode set by the thermostat. In this case, the running mode is unchangeable and the ON/OFF key operation of the control is ineffective.

③ When this setting is saved successfully, it will be memorized upon power failure.

④ The state of the Thermostat can be changed when the unit is turned off.

3.3.2.19 IDU Heater

Go to the **FUNCTION** page and locate "**IDU Heater**", then, configure it through the Up/Down key, "**With**" or "**Without**".

[Notes]

it will be memorized upon power failure.

3.3.2.20 Other Heater

Go to the **FUNCTION** page and locate **Other heater**, then, configure it through the Up/Down key, "**With**" or "**Without**".

[Notes]

it will be memorized upon power failure.

3.3.2.21 Underpan Heater

Go to the **FUNCTION** page and locate "**Underpan Heater**" then, configure it through the Up/Down key, "**With**" or "**Without**".

[Notes]

it will be memorized upon power failure.

3.3.2.22 Water Tank

Go to the **FUNCTION** page and locate "**Water tank**" then, configure it through the Up/Down key, "**With**" or "**Without**".

[Notes]

① It will be memorized upon power failure.

② This setting is allowed only when the unit is turned off.

3.3.2.23 Tank Sensor

Go to the **FUNCTION** page and locate "**Water tank**", then, configure it through the Up/Down key, "**1**" or "**2**". When the water tank is unavailable, this option will be reserved.

[Notes]

it will be memorized upon power failure.

3.3.2.24 Solar Heater

Go to the **FUNCTION** page and locate "**Solar heater**", then, configure it through the Up/Down key, "**With**" or "**Without**".

[Notes]

it will be memorized upon power failure.

3.3.2.25 FCU

Go to the **FUNCTION** page and locate "**FCU**", then, configure it through the Up/Down key, "**With**" or "**Without**".

[Notes]

It will be memorized upon power failure.

3.3.2.26 Remote Sensor

Go to the **FUNCTION** page and locate "**Remote sensor**", then, configure it through the Up/Down key, "**With**" or "**Without**".

[Notes]

It will be memorized upon power failure.

"**T-room ctrl**" can be selected only when the Remote Sensor is set to "**With**".

3.3.2.27 Air removal

Go to the **FUNCTION** page and locate "**Air removal**", then, configure it through the Up/Down key, "**On**" or "**Off**".

[Notes]

① It will not be memorized upon power failure.

② It can be set only when the unit is turned off.

3.3.2.28 Address

Go to the **FUNCTION** page and locate "**Address**", then, configure it through the Up/Down key to set the address.

[Notes]

① It indicates the address of the control and is intended for the group control.
② It will not be memorized upon power failure.
③ The address range is [0,125] and [127,253]
④ The default address is 0 for the initial use.

3.3.2.29 Doorguard

Go to the **FUNCTION** page and locate "**Doorguard**", then, configure it through the Up/Down key, "**On**" or "**Off**".

[Notes]

⑤ When it is activated, the control will check the card is inserted or not. If inserted, the control will run normally; if not, the control will turn off the unit and back to the homepage. In this case, any key operation is ineffective (except for the combined key operation), or a dialogue box will pop up, warning "Keycard uninserted!".

⑥ It will not be memorized upon power failure.

3.3.3 Parameter Setting (Parameter Set)

3.3.3.1 User Parameter Setting

1) At the homepage, it is able to go to the **PARAMETER** page by pressing the Function key no.2.

2) At the **Parameter Set** page, by the Left/Right key select the desired option and then by the Up/Down key increase or decrease the setting value which will be continuously changed when pressing and holding the key.

3) When the setting is finished, press "**Save**" and a dialog box will pop up, reminding "**Save settings?**". If so, press the OK key; if not press the Cancel key to not save this setting.

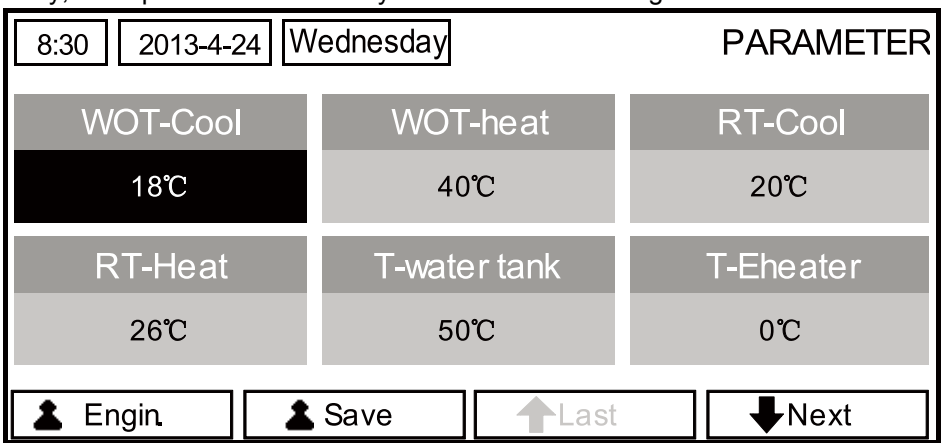

User Setting

No.	Full Name	Displayed Name	Range(℃)	Range(℉)	Default
1	Water out temperature for cooling	WOT-Cool	7~25 ℃ [With FCU] 18~25 ℃ [Without FCU]	45~77 ℉ [With FCU] 64~77 ℉ [Without FCU]	7 ℃/45 ℉ [With FCU] 18 ℃/64 ℉ [Without FCU]
2	Water out temperature for heating	WOT-Heat	25~55 ℃ [High temp.] 25~45 ℃ [Low temp.]	77~131℉ [High temp.] 77~113 ℉ [Low temp.]	45 ℃/113 ℉ [High temp.] 35 ℃/95 ℉ [Low temp.]
3	Room temperature for cooling	RT-Cool	18~30 ℃	64~86 ℉	20 ℃/68 ℉
4	Room temperature for heating	RT-Heat	18~30 ℃	64~86 ℉	26 ℃/79 ℉
5	Tank temperature	T-water tank	40~80 ℃	104~176 ℉	50 ℃/122 ℉
6	Eheater-on ambient temperature	T-Eheater	-20~18 ℃	-4~64 ℉	0 ℃/32 ℉
7	Extra-heater-on ambient temperature	T-Extraheater	-20~18 ℃	-4~64 ℉	0 ℃/32 ℉
8	Max heat pump waterout temperature (no eheater)	T-HP Max	40~50 ℃	104~122 ℉	50 ℃/122 ℉
9	Lower limit ambient temperature at the auto mode for heating	Lower AT-Heat	-20~5 ℃	-4~41 ℉	-15 ℃/5 ℉
10	Upper limit temperature at the auto mode for heating	Upper AT-Heat	10~20 ℃	50~68 ℉	15 ℃/59 ℉
11	Upper limit room temperature at the auto mode for heating	Upper RT-Heat	22~30 ℃	72~86 ℉	24 ℃/75 ℉
12	Lower limit room temperature at the auto mode for heating	Lower RT-Heat	18~21℃	64~70 ℉	20 ℃/68 ℉
13	Upper limit water-out temperature at the auto mode for heating	Upper WT-Heat	46~55 ℃ [High temp.] 30~35 ℃ [Low temp.]	115~131℉ [High temp.] 86~95 ℉ [Low temp.]	48 ℃/118 ℉ [High temp.] 35 ℃/95 ℉ [Low temp.]
14	Lower limit water-out temperature at the auto mode for heating	Lower WT-Heat	36~45 ℃ [High temp.] 25~29 ℃ [Low temp.]	97~113 ℉ [High temp.] 77~84 ℉ [Low temp.]	40 ℃/104 ℉ [High temp.] 29 ℃/84 ℉ [Low temp.]
15	Lower limit ambient temperature at the auto mode for cooling	Lower AT-Cool	10~25 ℃	50~77 ℉	25 ℃/77 ℉
16	Upper limit temperature at the auto mode for cooling	Upper AT-Cool	26~48 ℃	79~118 ℉	40 ℃/104 ℉
17	Upper limit room temperature at the auto mode for cooling	Upper RT-Cool	24~30 ℃	75~86 ℉	27 ℃/81℉
18	Lower limit room temperature at the auto mode for cooling	Lower RT-Cool	18~23 ℃	64~73 ℉	22 ℃/72 ℉
19	Upper limit water-out temperature at the auto mode for cooling	Upper WT-Cool	15~25 ℃ [With FCU] 22~25 ℃ [Without FCU]	59~77 ℉ [With FCU] 72~77 ℉ [Without FCU]	15 ℃/59 ℉ [With FCU] 23 ℃/73 ℉ [Without FCU]
20	Lower limit water-out temperature at the auto mode for cooling	Lower WT-Cool	7~14 ℃ [With FCU] 18~21 ℃ [Without FCU]	45~57 ℉ [With FCU] 64~70 ℉ [Without FCU]	7 ℃/45 ℉ [With FCU] 18 ℃/64 ℉ [Without FCU]
21	Temperature deviation for cooling	△T-Cool	2~10 ℃	36~50 ℉	5 ℃/41℉
22	Temperature deviation for heatling	△T-Heat	2~10 ℃	36~50 ℉	10 ℃/50 ℉
23	Temperature deviation for heating water	△T-hot water	2~8 ℃	36~46 ℉	5 ℃/41℉

3.3.4 View

★1 At the homepage, by pressing the Function key no.3 it is able to go to the **VIEW** page as shown in the figure below.

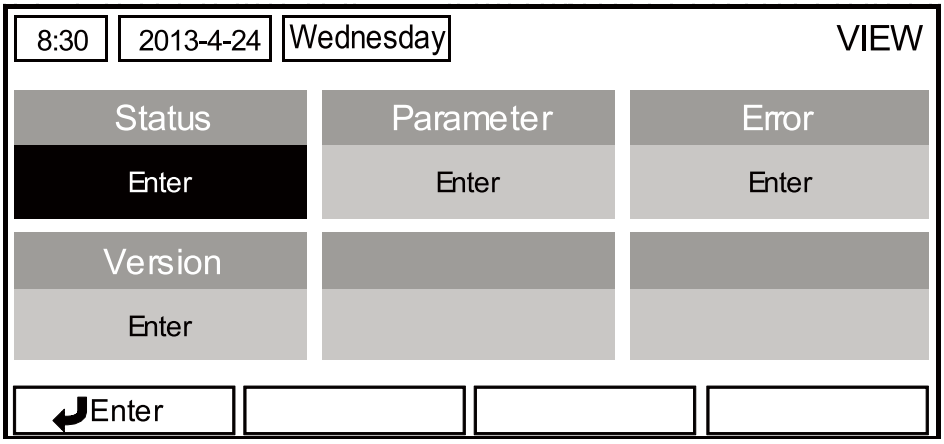

3.3.4.1 Status View

★1 At the **VIEW** page, select "**Status**" and then press the OK key to go to the **STATUS** page.

★2 At the **STATUS** page, it is able to check the status of each component.

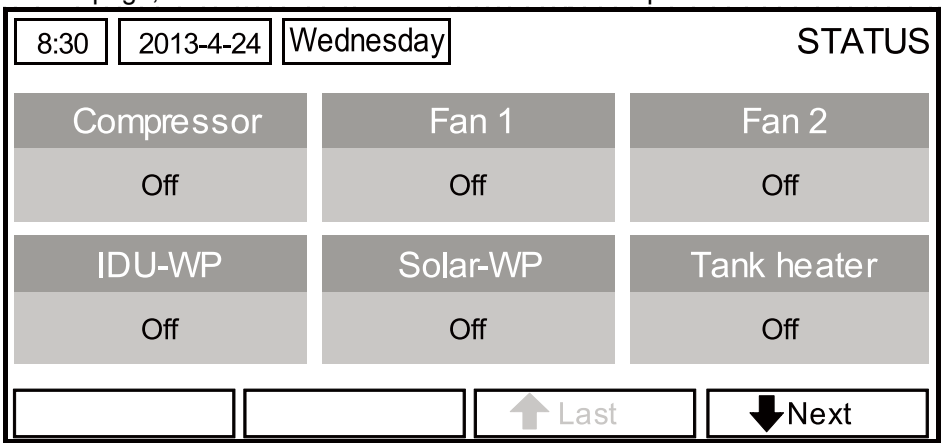

Viewable Components

Full Name	Displayed Name	Status
Compressor running state	Compressor	On/Off
Fan 1 running state	Fan 1	On/Off
Fan 2 running state	Fan 2	On/Off
IDU water pump running state	IDU-WP	On/Off
Solar water pump running state	Solar-WP	On/Off
Tank heater running state	Tank heater	On/Off
2-Way valve running state	3-way valve	On/Off
Crankcase heater running state	Crankc.heater	On/Off
Chassis heater running state	Chassis heater	On/Off
Defrost	Defrost	On/Off
Oil return	Oil return	On/Off
Thermostat	Thermostat	On/Off
Assistant heater running state	Assist. heater	On/Off
Water switch running state	Water switch	On/Off
Circulating two-way valve 1 running state	CTW-valve 1	On/Off

Circulating two-way valve 2 running state	CTW-valve 2	On/Off
Doorguard	Doorguard	Card in/Card out
Opration LED	Opration LED	On/Off
Error LED	Error LED	On/Off
3-way valve running state	4-way valve	On/Off
IDU heater 1 running state	IDU heater 1	On/Off
IDU heater 2 running state	IDU heater 2	On/Off
Auto-antifreeze	Auto-antifree.	Enabled/Disabled

3.3.4.2 Parameter View (Para View)

1) At the **VIEW** page, select **Parameter** and then press the OK key to go to the **Para View** page.
2) At the **Para View** page, it is able to view each parameter.

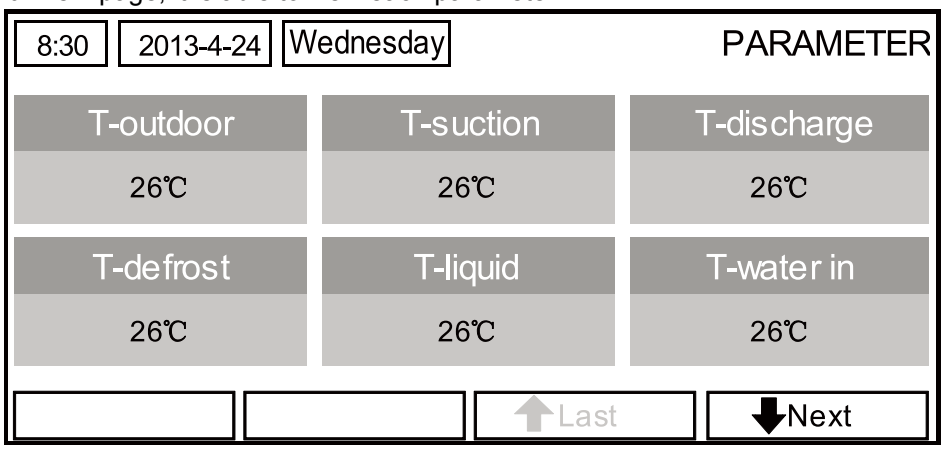

No.	Full Name	Displayed Name	Status
1	Outdoor temperature	T-outdoor	Exact values
2	Suction temperature	T-suction	
3	Discharge temperature	T-discharge	
4	Defrost temperature	T-defrost	
5	Liquid temperature	T-liquid	
6	Water in temperature	T-water in	
7	Plate exchanger water-out temperature	T-waterout PE	
8	E-heater water-out temperature	T-waterout EH	
9	Water tank temperature set point	T-tank ctrl.	
10	Water tank temperature reading	T-tank display	
11	Remote room temperature	T-remote room	
12	Refrigerant-side gas pipe temperature	T-RGP	
13	Solor heater water-out temperature	T-SHW	
14	Target temperature for auto mode	T-auto mode	
15	Target temperature for floor debug	T-floor debug	
16	Time period for floor debug	Debug time	

3.3.4.3 Error View

1) At the **VIEW** page, select **Error** and then press the OK key to go to the **ERROR** page.
2) At the **Error View** page, it is able to view each error.

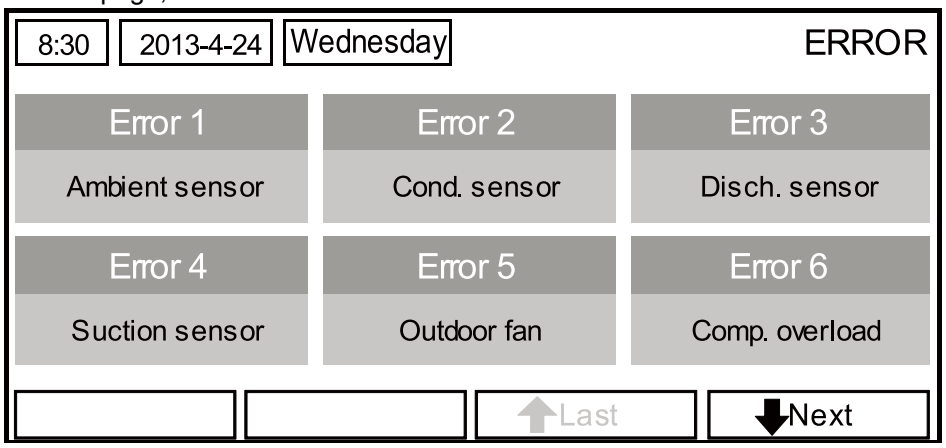

[Notes]

① The real-time error will show on the control. Taking Error 2 in the above figure for example, when it is recovered, it will disappear and be replaced by Error 3, and other errors follow the same way.

② If the total no. of errors exceed six, other errors should be viewed by switching pages through "**Last**" and "**Next**".

③ Any one among "**IDU auxiliary heater 1 error**", "**IDU auxiliary heater 2 error**", "**Water tank heater error**" occurs, the control will beep until this error has been cleared.

④ See the following table for error description.

Full Name	Displayed Name	Error Code
Ambient temperature sensor error	Ambient sensor	F4
Condenser temperature sensor error	Cond. sensor	F6
Discharge temperature sensor error	Disch. sensor	F7
Suction temperature sensor error	Suction sensor	F5
Outdoor fan error	Outdoor fan	EF
Compressor internal overload protection	Comp. overload	H3
High pressure protection	High pressure	E1
Low pressure protection	Low pressure	E3
High discharge protection	Hi-discharge	E4
Incorrect capacity DIP switch setting	Capacity DIP	c5
Communication error between indoor and outdoor unit	ODU-IDU Com.	E6
High pressure sensor error	Pressure sens.	FC
Heat exchanger-leaving water temperature sensor error	Temp-HELW	F9
Auxiliary heater-leaving water temperature sensor error	Temp-AHLW	dH
Refrigerant liquid line temperature sensor error	Temp-RLL	F1
Heat exchanger-entering water temperature sensor error	Temp-HEEW	/
Water tank water temperature sensor 1 error	Tank sens. 1	FE
Water tank water temperature sensor 2 error	Tank sens. 2	/
Refrigerant gas line temperature sensor error	Temp-RGL	F3
Solar heater-leaving water temperature sensor error	Temp-SHLW	/
Room temperature sensor error	Sensor-RT	F0
Water flow swich protection	WS-protection	EC
Welding protection of the auxiliary heater 1	Auxi. heater 1	EH
Welding protection of the auxiliary heater 2	Auxi. heater 2	EH

Welding protection of the water tank heater	Auxi. -WTH	EH
Under-voltage DC bus or voltage drop error	DC under-vol.	PL
Over-voltage DC bus	DC over-vol.	PH
AC current protection (input side)	AC curr. pro.	PA
IPM defective	IPM defective	H5
PFC defective	FPC defective	Hc
Start failure	Start failure	Lc
Phase loss	Phase loss	LD
Drive module resetting	Driver reset	P0
Compressor over-current	Com. over-curr.	P5
Overspeed	Overspeed	LF
Sensing circuit error or current sensor error	Current sen.	Pc
desynchronizing	Desynchronize	H7
Compressor stalling	Comp. stalling	LE
Communication error	drive-main com.	P6
Radiator or IPM or PFC module overtemperature	Overtemp.-mod.	P8
Radiator or IPM or PFC module temperature sensor error	T-mod. sensor	P7
Charging circuit error	Charge circuit	PU
Incorrect AC voltage input	AC voltage	PP
Drive board temperature sensor error	Temp-driver	PF
AC contactor protection or input zero crossing error	AC contactor	P9
Temperature drift protection	Temp. drift	PE
Current sensor connection protection (current sensor not connected to phase U/V)	Sensor con.	PD
Communication error to the outdoor unit	ODU Com.	E6
Communication error to the indoor unit	IDU Com.	E6
Communication error to the drive	Driver Com.	E6

3.3.4.4 Version View (VERSION)

1) At the **VIEW** page, select **Version** and then press the OK key to go to the **VERSION** page.
2) At the **VERSION** page, the program and protocol versions are listed.

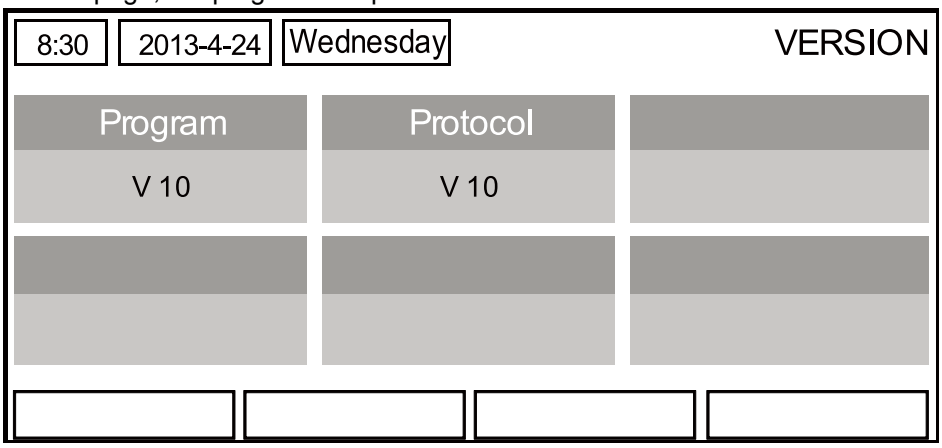

3.3.5 General Set

At the homepage, by pressing "**GEN**." access to the GENERAL SET page. At this page, it is able to set "**Temp. unit**", "**Language**", "**On/off memory**", "**Time & Date**", "**Beeper**" and "**Back light**", as shown in the figure below.

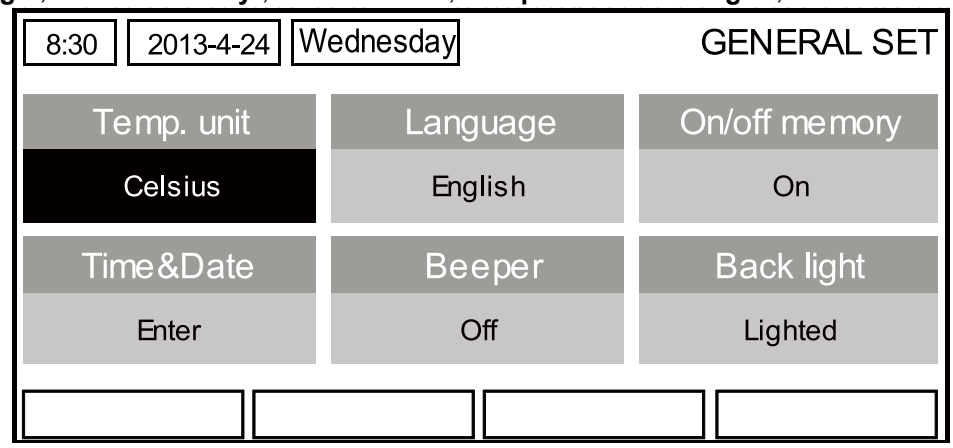

No.	Full Name	Displayed Name	Range	Default	Remarks
1	Temperature unit	Temp. unit	Celsius/Fahrenheit	Celsius	/
2	Language	Language	中文 /English	English	/
3	On/off memory	On/off memory	On/Off	On	/
4	Time&Date	Time&Date	/	/	/
5	Beeper	Beeper	On/Off	On	/
6	Back light	Back light	Lighted/Energy save	Energy save	"On": it always lights on. "Eco": it lights off when there is no key operation for 1 minute, and will lights on where there is any key operation.

3.3.5.1 Clock Setting

1) At the homepage, by pressing "**GEN.**" access to the **GENERAL SET** page. Then, select "**Time & Date**" at this page. After that, go to the "**Time & Date**" setting page by pressing the OK key.

2) Change the set value by pressing the Up/Down key. Then by pressing "**Save**", a pop-up window will pop up to remind if you are determined to save this setting. If so, press the OK key. If not, press the Cancel key to not save this setting. The saving setting will update at the upper left corner of the control.

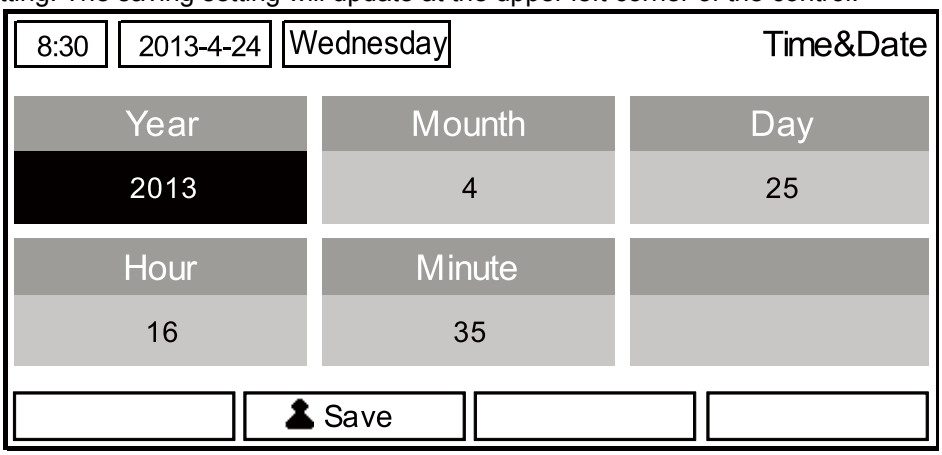

3.3.6 Key Lock

At the homepage, by pressing the Up/Down keys simultaneously for 5 seconds, it is able to activate or deactivate this function. When it is activated, any key operation is ineffective.

3.4 De-installation and Re-installation of the Control

The control is installed on the indoor unit, while, if there is a need to install it somewhere else, please follow the instructions below.

Step 1: Remove eight self-tapping screws on the faceplate and then take out the faceplate.

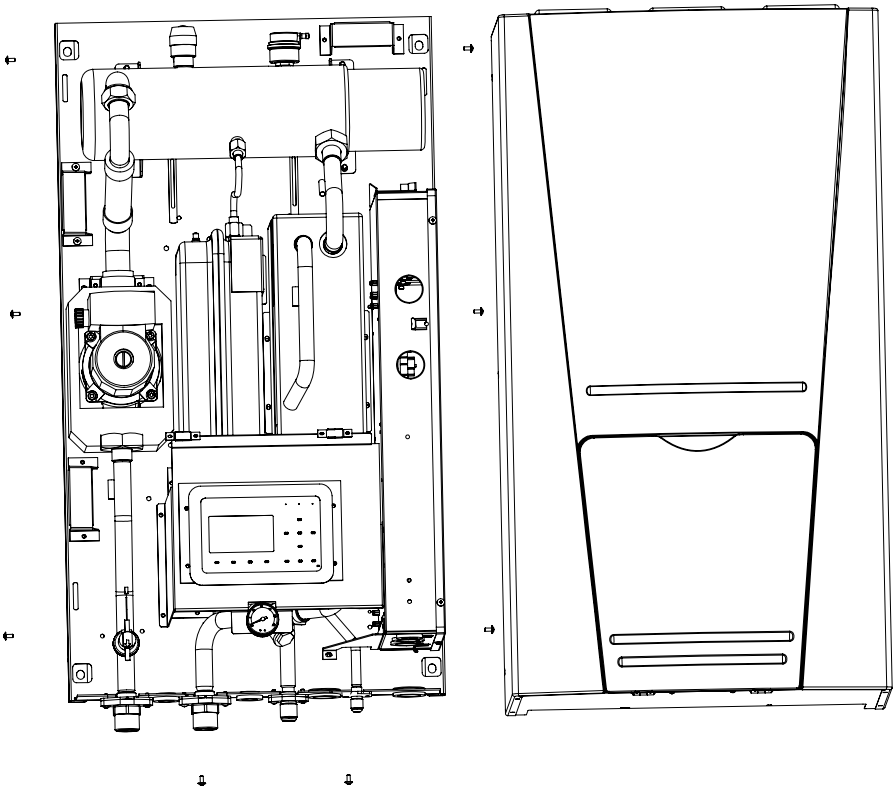

Step 2: De-installation of the control.

(1)Draw the communication line out	(2)Remove four screws on the rubber pad	(3)Take out the rubber pad
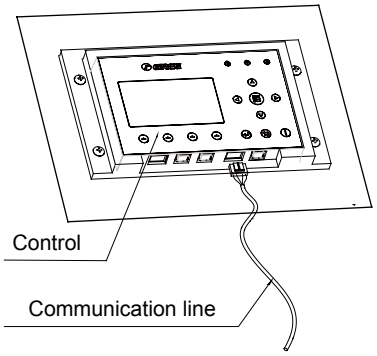	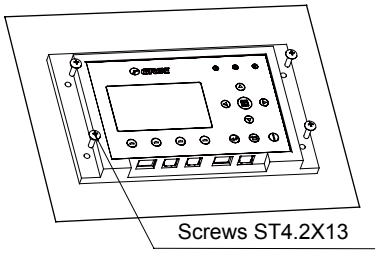	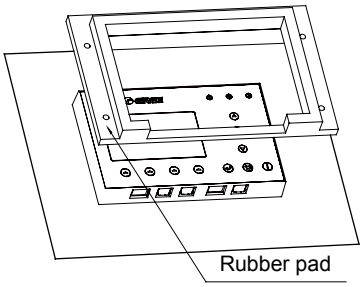

Step 3: Take out the control and then install it somewhere required.

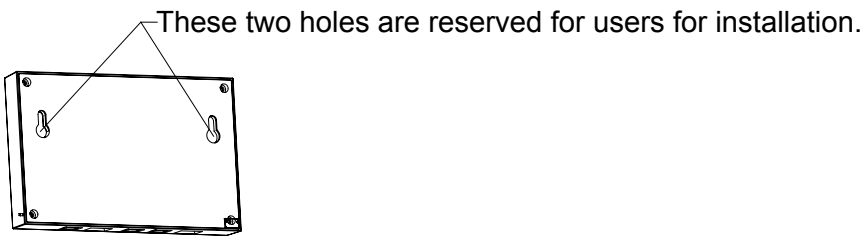

4 CONTROL WIRING DESIGN

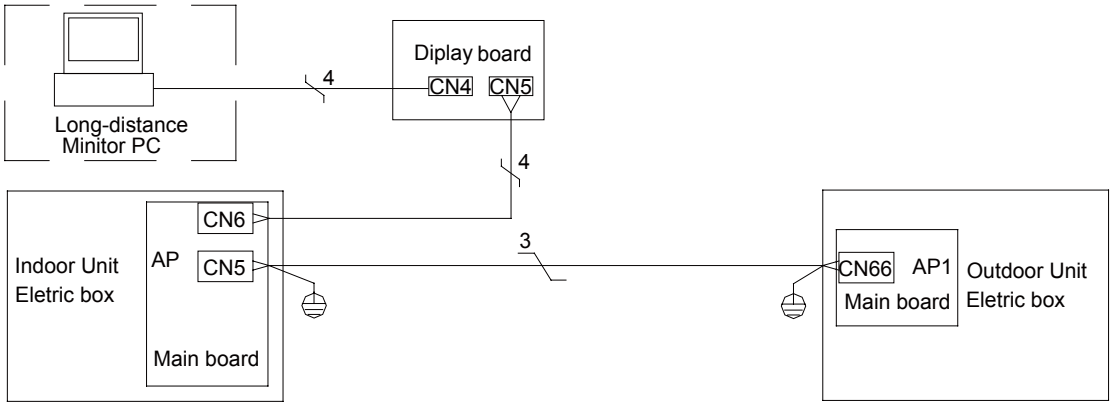

Installation Instruction :

(1) Wired controller connects to terminal CN6 on mainboard of indoor unit by 4-core communication line.

(2) The indoor unit connects to outdoor unit by 3-core communication line. Wiring terminal of indoor unit is CN5 and that of the outdoor unit is CN66.

(3) Remote monitoring device connects to terminal CN4 of Display Board by 4-core communication line.

INSTALLATION

INSTALLATION

1 INSTALLATION OF UNITS

1.1 Installation Positions

1.1.1 Installation Positions of Outdoor

- Outdoor unit must be installed on a firm and solid support.
- Outdoor unit shall be installed close to the indoor unit, hence to minimize the length and bends of cooling pipe.
- Avoid placing the outdoor unit under window or between two constructions, hence to prevent normal operating noise from entering the room.
- Air flow at inlet and outlet shall not be blocked.
- Install at a well-ventilated place, so that the machine can absorb and discharge sufficient air.
- Do not install at a place where flammable or explosive goods exist or a place subject to severe dust, salty fog and polluted air.

1.1.2 Installation Positions of Indoor

- Avoid direct sunshine.
- Ensure the hanger rod, ceiling and building structure have sufficient strength to support the weight of air conditioner unit.
- Drainage pipe is easy to connect out.
- Indoor and outdoor connection pipes are easy to go outdoors
- Do not install at a place where flammable or explosive goods exist or flammable or explosive gas might leak.
- Do not install at a place subject to corrosive gas, severe dust, salty fog, smoke or heavy moisture.
- Air flow at inlet and outlet air is not blocked.

Note:

The water pressure gage is installed in returning water line in the indoor unit,Please adjust the hydraulics system pressure according to next item:

① If the pressure is less than 0.5 bar, please recharge the water immediately;

② When recharging, the hydraulics system pressure should be not more than 2.5Bar.

1.1.3 Installation Positions of Water Tank

- The insulated water tank should be installed and keep levelly within 5m and vertically within 3m from the Indoor unit. It can be installed in the room.
- Standing water tank must be installed vertically with the bottom on the ground, never suspended. Installation place must be firm enough and the water tank should be fixed on the wall with bolts to avoid vibration, as shown in the following figure. Weight capacity of water tank during installation should also be considered.
- The minimum clearance from the water tank to combustible surface must be 500mm.
- There should be water pipe, hot water joint and floor drain near the water tank in favor of water replenishment, hot water supply and drainage of water tank.
- Connection of inlet/outlet waterway: Connect the safety check valve attached with the unit (→ points at insulated water tank) with the water inlet of water tank with PPR pipe according to the following figure, sealing with unsintered tape. The other end of the safety check valve should connect with tap water joint. Connect the hot water pipe and water outlet of water tank with PPR pipe.

1.2 Matters Need Attention

- The installation of unit must be in accordance with national and local safety codes.
- Installation quality will directly affect the normal use of air conditioner unit. The user is prohibited from installation by himself. Please contact your dealer after buying this machine. Professional installation workers will provide installation and test services according to installation manual.
- Do not connect to power until all installation work is completed.

1.3 Dimension Data and Installation Guide

1.3.1 Outdoor Unit

● CH-HP6.0SINK(O),CH-HP8.0SINK(O),CH-HP10SINK(O):

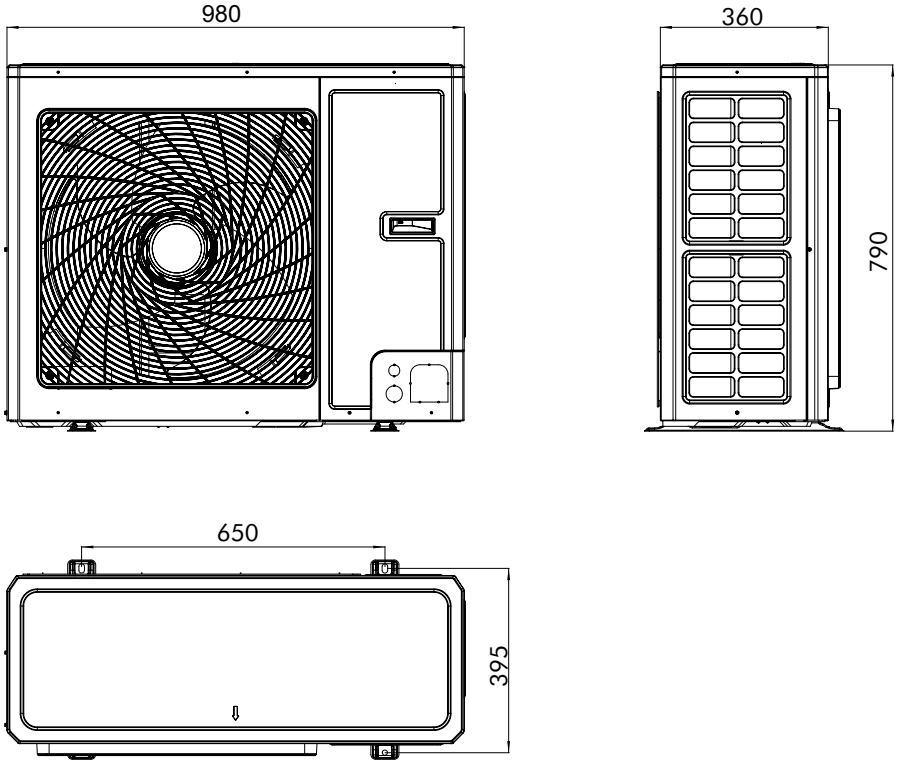

● CH-HP12SINK(O),CH-HP14SINK(O),CH-HP16SINK(O),CH-HP12SINM(O),CH-HP14SINM(O),CH-HP16SINM(O):

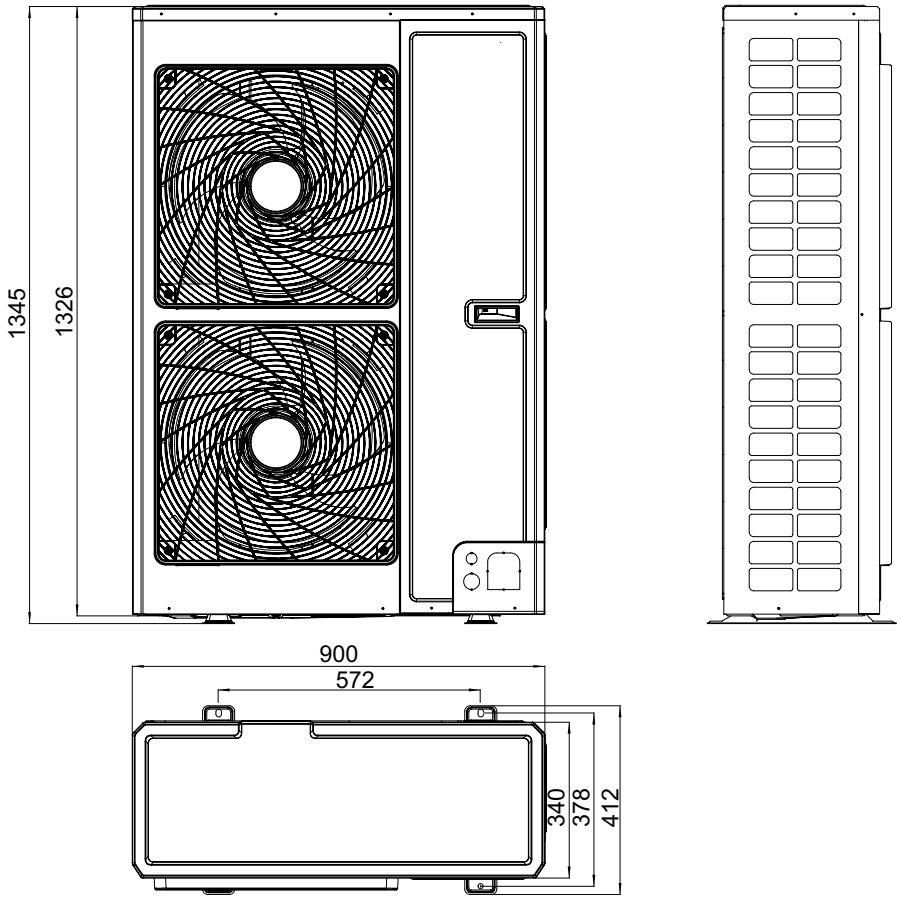

1.3.2 Indoor Unit

● CH-HP6.0SINK(I),CH-HP8.0SINK(I),CH-HP10SINK(I),CH-HP12SINK(I),GRS-CQ14Pd/NaB-K(I),CH-HP16SINK(I),CH-HP12SINM(I),CH-HP14SINM(I),CH-HP16SINM(I):

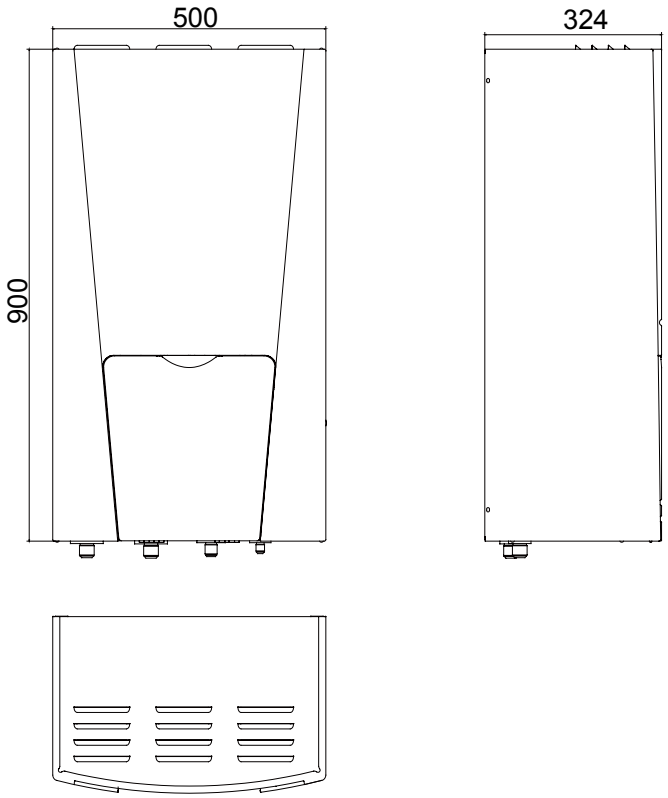

Install process of indoor unit

Step1: Drilling hole on the wall in the following draw.

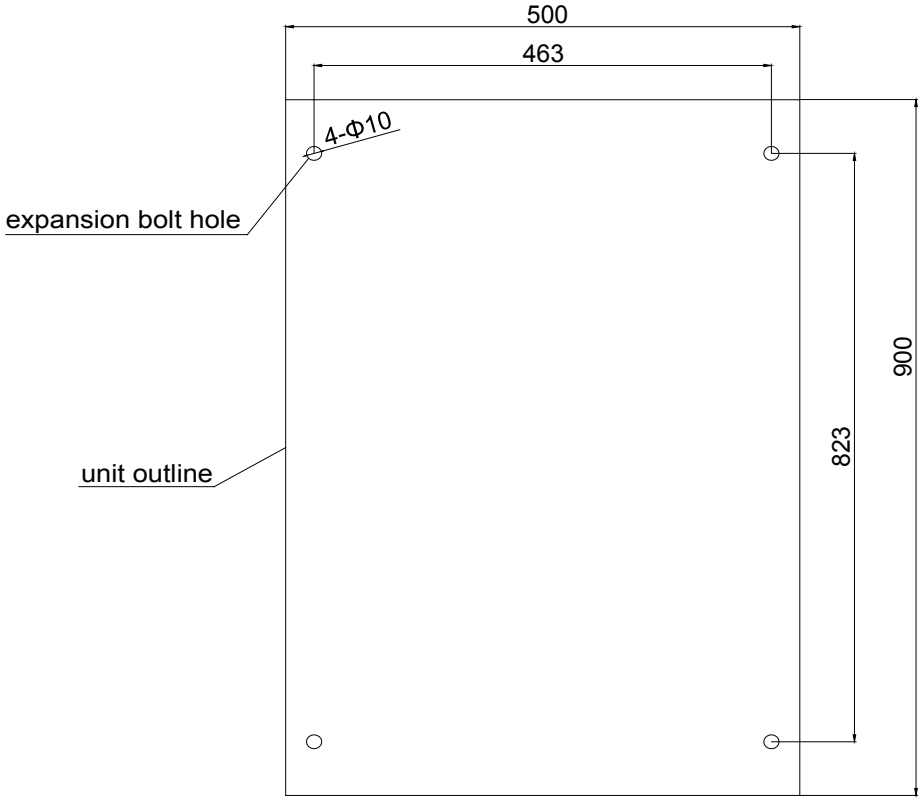

Step2: Releasing screws, detach front cover from the indoor unit.

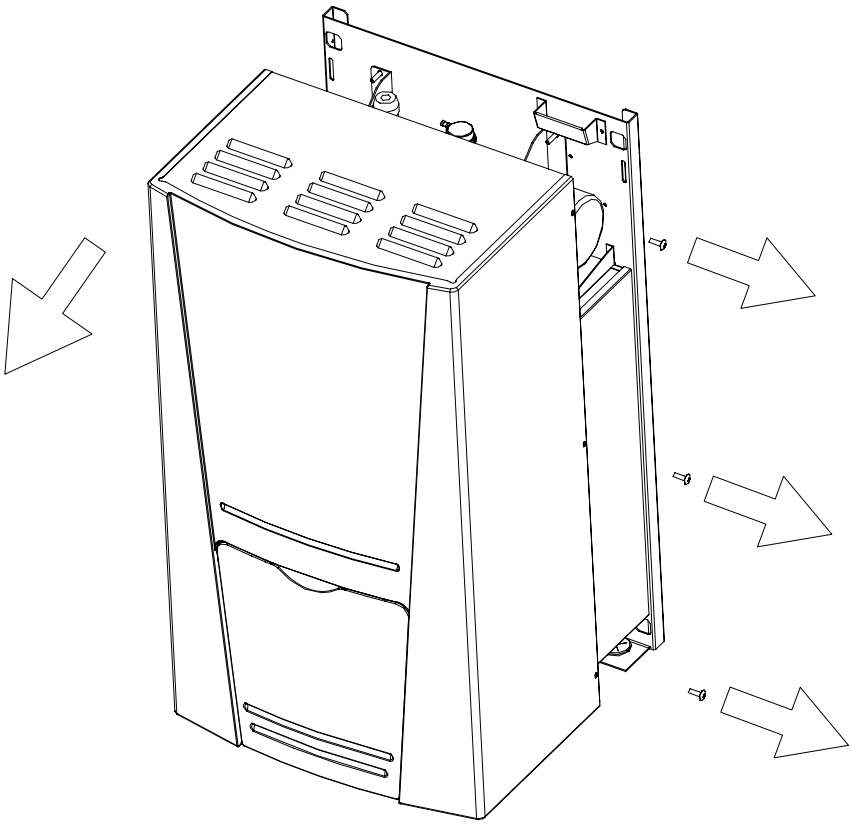

Step3: Attaching indoor unit to the wall make use of accessory expansion bolt.

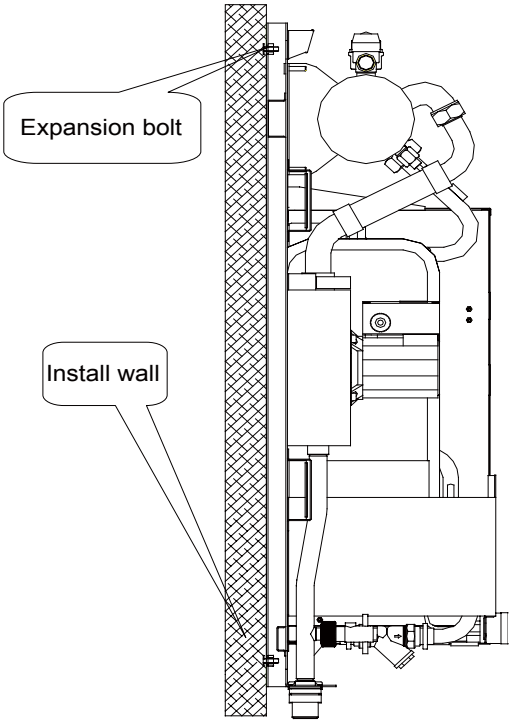

⚠**CAUTION!**

While lifting the indoor unit, at least two persons should be joined. Weight of the indoor unit is almost 52kg.

Precautions on Installation of Indoor Unit

① Indoor unit shall be vertically mounted on the wall of the room with expansion bolt.

② Keep the Indoor unit away from heat sources such as heat sink and so on in the room as much as possible.

③ Keep the indoor unit as close as possible to outdoor unit. Level distance between connection pipes can not exceed 30m and vertical distance can not exceed 15m.

④ Before commissioning, the dust-proof cap of the automatic relief valve must be loosened, other than entirely being removed away, and it can be tightened in case that it leaks.

1.3.3 Installation of Insulated Water Tank

1.3.3.1 Installation Measure

- The insulated water tank should be installed and keep levelly within 5m and vertically within 3m from the Indoor unit. It can be installed in the room.
- Standing water tank must be installed vertically with the bottom on the ground, never suspended. Installation place must be firm enough and the water tank should be fixed on the wall with bolts to avoid vibration, as shown in the following figure. Weight capacity of water tank during installation should also be considered.

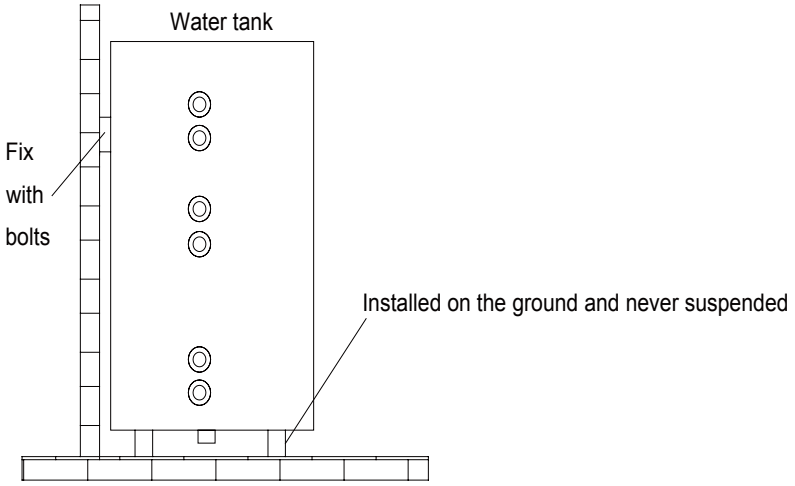

- The minimum clearance from the water tank to combustible surface must be 500mm.
- There should be water pipe, hot water joint and floor drain near the water tank in favor of water replenishment, hot water supply and drainage of water tank.
- Connection of inlet/outlet waterway: Connect the safety check valve attached with the unit (→ points at insulated water tank) with the water inlet of water tank with PPR pipe according to the following figure, sealing with unsintered tape. The other end of the safety check valve should connect with tap water joint. Connect the hot water pipe and water outlet of water tank with PPR pipe.

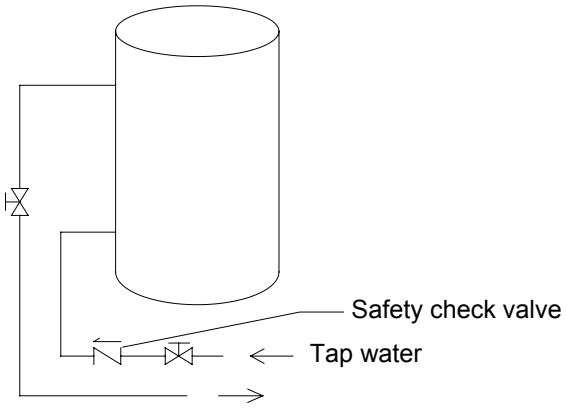

Note:

For safe use of water, water outlet/inlet of water tank must connect with a certain length of PPR pipe ,L ≥70×R^2(cm, R is inside radius of the pipe). Moreover, heat preservation should be conducted and metal pipe can not be used. For the first use, water tank must be full of water before the power is on.

Outline dimension and parameter of water tank

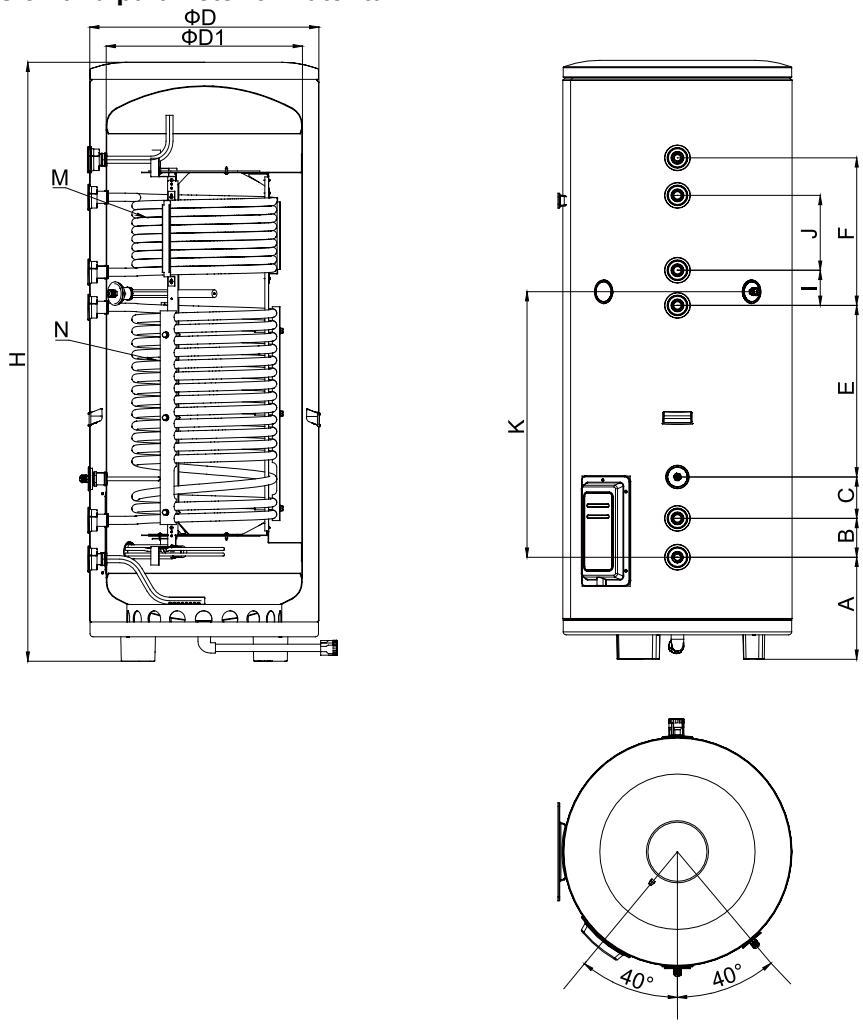

Models		WT200FH3EK	WT2002FH3EK	WT300FH3EK	WT3002FH3EK
		WT200FH3EM	WT2002FH3EM	WT300FH3EM	WT3002FH3EM
Litre		200L	200L	300L	300L
coil specification		SUS304 Φ22×0.8			
coil length	M	\	10m	\	10m
	N	13m	13m	18.5m	18.5m
D(mm)		540		620	
D1(mm)		438		528	
H(mm)		1595		1620	
A(mm)		272		280	
B(mm)		105			
C(mm)		112			
E(mm)		432		464	
F(mm)		431		399	
I(mm)		\	80	\	95
J(mm)		\	247.5	\	202.5
K(mm)		739		718	
Outline (Diameter×H) (mm)		Φ540×1595		Φ620×1620	
Net weight	kg	68	71	82	87

Connection of Waterway System

- If connection between water tank and indoor unit should be through the wall, drill a holeφ70 for pass of circulating water pipe. It is unnecessary if the hole is not needed.
- Preparation of pipelines: Circulating water outlet/inlet pipe must be hot water pipe, PPR pipe with nominal out diameter of dn25 and S2.5 series (wall thickness of 4.2mm) being recommended. Cooling water inlet pipe and hot water outlet pipe of water tank should also be hot water pipe, PPR pipe with nominal out diameter of dn20 and S2.5 series (wall thickness of 3.4mm) being recommended. If other insulated pipes are adopted, refer to the above dimensions for out diameter and wall thickness.
- Installation of circulating water inlet/outlet pipes: Connect the water inlet of unit with circulating outlet of water tank and water outlet of unit with circulating inlet of water tank.
- Installation of water inlet/outlet pipes of water tank: Safety check valve (→ on the valve body points at water tank), filter and cut-off valve must be installed for water inlet pipe according to the installation sketch of unit. At least a cut-off valve is needed for the water outlet pipe.
- Installation of blow-off pipe at the bottom of water tank: Connect a piece of PPR pipe with drainage outlet to floor drain. A cut-off valve must be installed in the middle of the drainage pipe and at the place where it is easy to be operated by the users.
- After connection of all waterway pipelines, perform leakage test firstly (refer to debugging of the unit). After that, bind up the water pipes, water temp sensor and wires with wrapping tapes attached with the unit.
- Refer to Installation Sketch of Unit for details.

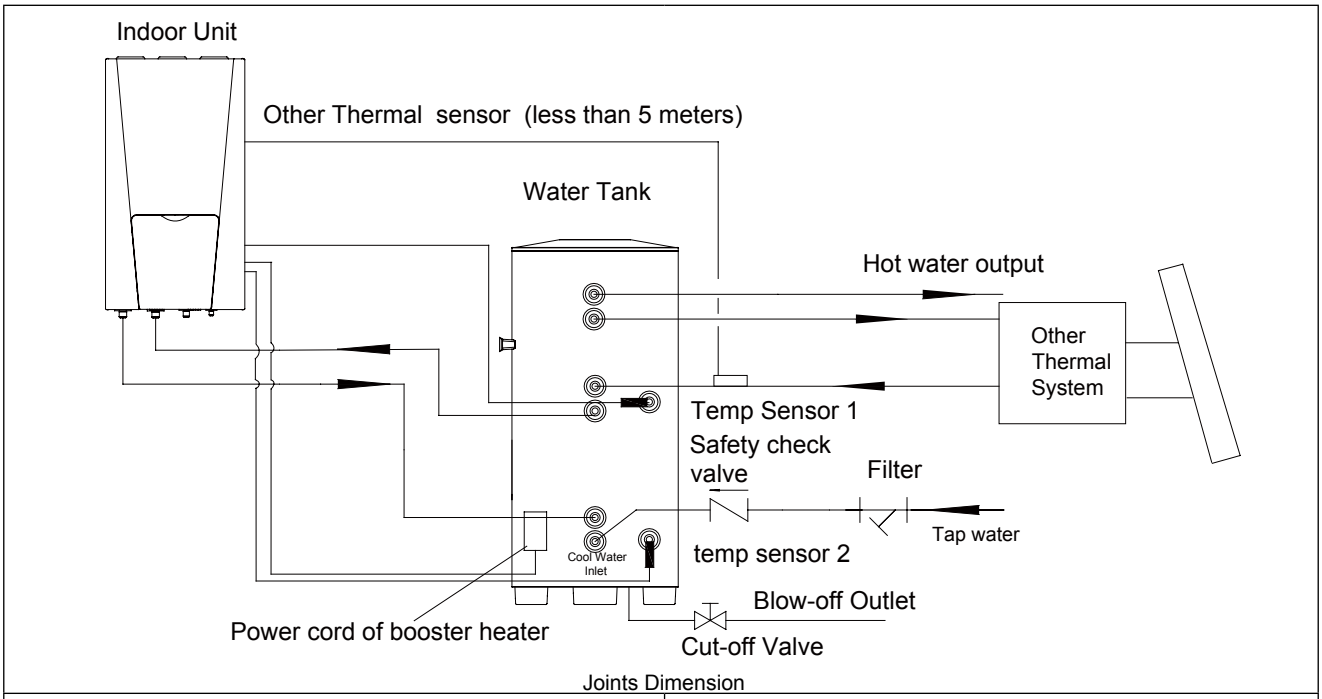

Joints Dimension

Description	Joint pipe thread
Circulating water inlet/outlet of main unit	1″Male BSP
Cooling water inlet of water tank	1/2″Female BSP
Circulating water inlet/outlet of water tank	3/4″Female BSP
Hot water outlet of water tank	1/2″Female BSP

Note:

① Distance between indoor unit and water tank should not exceed 5m levelly and 3m vertically. If higher, please contact with us. Water tank on lower and main unit on higher side is recommended.

② Prepare the materials according to the above joints dimension. If cut-off valve is installed outside the room, PPR pipe is recommended to avoid freeze damage.

③ Waterway pipelines can't be installed until water heater unit is fixed. Do not let dust and other sundries enter into pipeline system during installation of connection pipes.

④ After connection of all waterway pipelines, perform leakage test firstly. After that, perform heat preservation of waterway system; meanwhile, pay more attention to valves and pipe joints. Ensure enough thickness of insulated cotton. If necessary, install heating device for pipeline to prevent the pipeline from freezing.

⑤ Hot water supplied from insulated water tank depends on pressure of water tap, so there must be supply of tap water.

⑥ During using, the cut-off valve of cooling water inlet of water tank should be kept normally on.

1.3.4 Electric Wiring

1.3.4.1 Wiring Principle

General principles

- Wires, equipment and connectors supplied for use on the site must be in compliance with provisions of regulations and engineering requirements.
- Only electricians holding qualification are allowed to perform wire connection on the site.
- Before connection work is started, the power supply must be shut off.
- Installer shall be responsible for any damage due to incorrect connection of the external circuit of the unit.
- Caution --- MUST use copper wires.

Connection of power cable to the electric cabinet of the unit

- Power cables should be laid out through cabling trough, conduit tube or cable channel.
- Power cables to be connected into the electric cabinet must be protected with rubber or plastic to prevent scratch by edge of metal plate.
- Power cables close to the electric cabinet of the unit must be fixed reliably to make the power terminal in the cabinet free from an external force.
- Power cable must be grounded reliably.

1.4 Installation Clearance Data

(1) Outdoor Unit

● CH-HP6.0SINK(O), CH-HP8.0SINK(O), CH-HP10SINK(O):

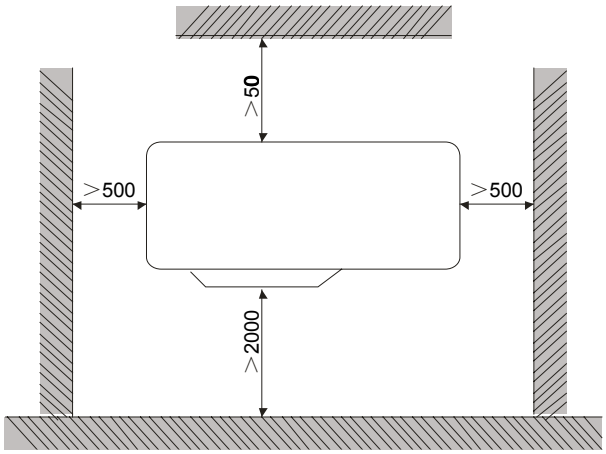

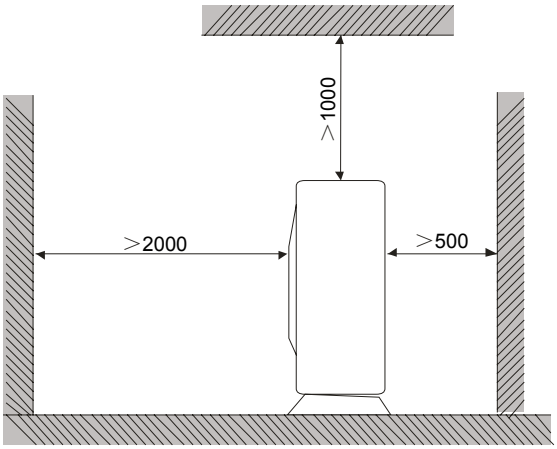

● CH-HP12SINK(O), CH-HP14SINK(O), CH-HP16SINK(O),CH-HP12SINM(O), CH-HP14SINM(O), CH-HP16SINM(O):

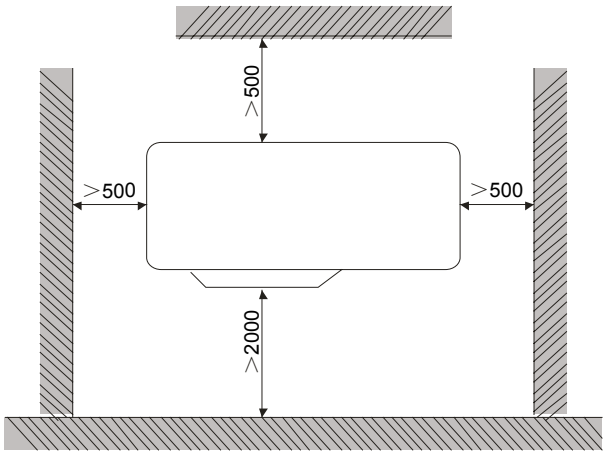

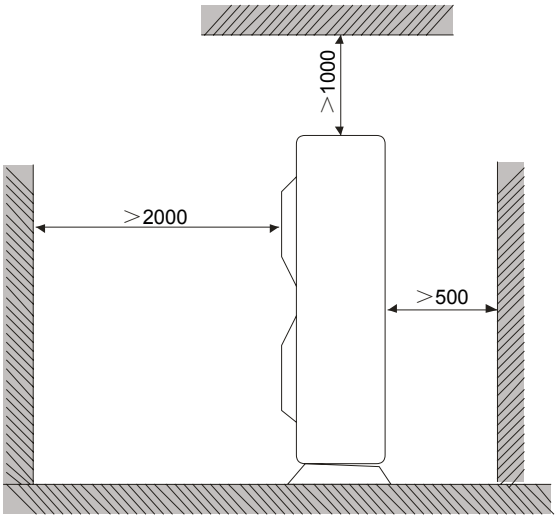

(2) Indoor Unit

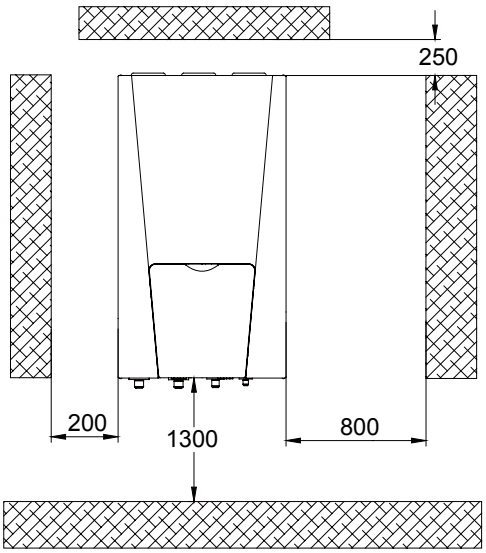

(3) Water Volume and Pump capacity

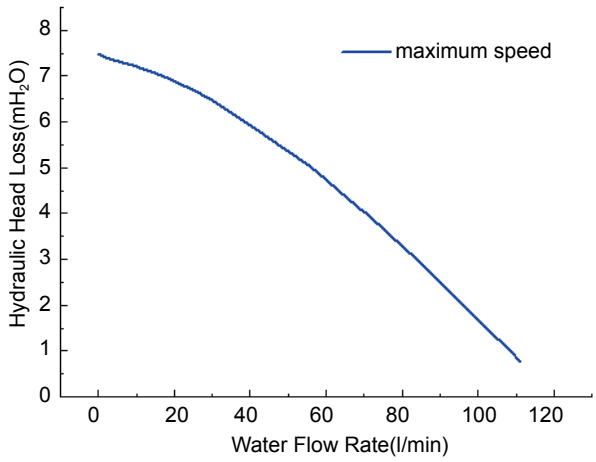

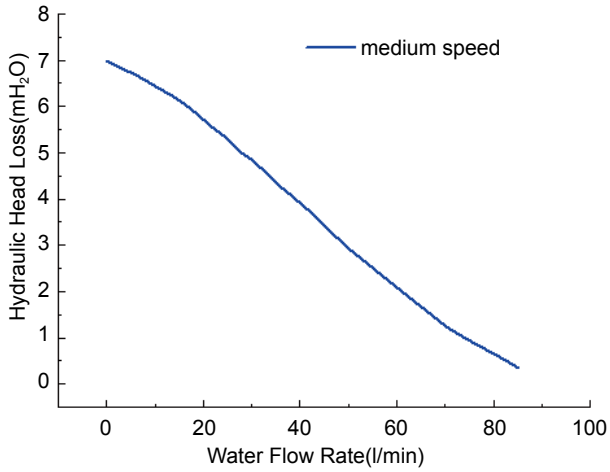

Note:

① The water pump is three speed-adjustable(maximum/medium/minimum), In most case, we strongly recommended to set speed as maximum;

② If the noise of the pump is not acceptable, we recommended change the default speed to medium speed, but to secure enough flow rate, do not set water speed as “Min”, it can lead unexpected flow rate error “EC”;

(4) Water Volume and Expansion Vessel Pressure

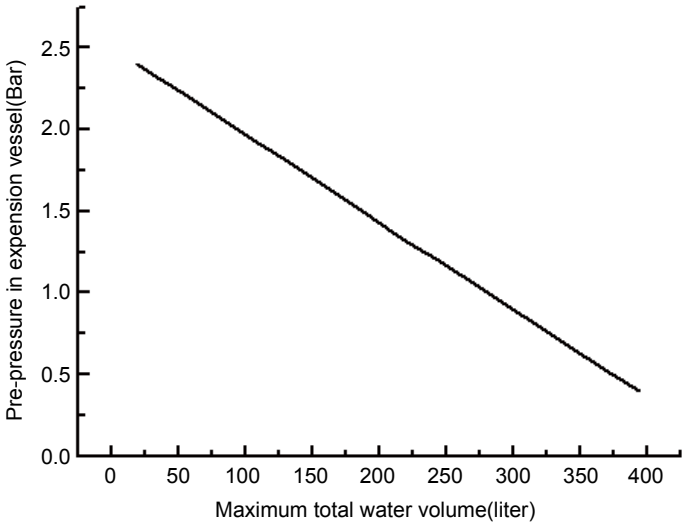

Note:

① Expansion vessel is included which 10 liter and 1bar pre-pressure.

② Total water volume of 280 liter is default; If total water is changed because of installation condition, the pre-pressure should be adjusted to secure proper operation. If the indoor unit is located at the highest position, adjustment is not required;

③ Minimum total water volume is 20 liter;

④ To adjust pre-pressure, use nitrogen gas by certificated installer.

1.5 The Method of Calculating the Charging Pressure of Expansion Vesse

The method of calculating the charging pressure of expansion vessel needed to be adjusted is as follows.

During installation, if the volume of water system has changed, please check if the pre-set pressure of the expansion vessel needs to be adjusted according to the following formula:

P_g =(H/10+0.3) Bar (H ---the difference between installing location of indoor unit and the highest spot of water system.)

Ensure that the volume of water system is lower than the maximum volume required in the above figure. If it exceeds the range, the expansion vessel does not meet the installing requirement.

Installation height difference[1]	Water volume	
	<280L	>280L
<7 m	Adjustment is not necessary	1. Pre-set pressure needs to be adjusted according to the above formula. 2. Check if the water volume is lower than the maximum water volume. (with help of the above figure)
>7 m	1. Pre-set pressure needs to be adjusted according to the above formula. 2. Check if the water volume is lower than the maximum water volume. (with help of the above figure)	The expansion vessel is too small and adjustment is not available.

[1]**Note**:

Installation height difference: the difference between installing location of indoor unit and the highest spot of water system; if the indoor unit is located at the highest point of the installation, the installation height difference is considered 0 m.

The minimum volume of the water system is 20 L.

Example 1: The indoor unit is installed 5m below the outdoor unit and the total volume of the water system is 100L.

Referring to the above figure, it is not necessary to adjust the pressure of the expansion vessel.

Example 2: The indoor unit is installed on the highest spot of the water system and the total water volume is 350L.

As the volume of water system is higher than 280L, it is necessary to adjust the pressure of the expansion vessel be lower.

The formula of calculating pressure

P_g =(H/10+0.3)=(0/10+0.3)=0.3 Bar

The maximum volume of the water system is about 410L. As the actual volume of the water system is 350L, the expansion vessel meets the installing requirement.

Adjust the pre-set pressure of the expansion vessel from 1.0Bar to 0.3Bar.

Selection of expansion valve

Formula:

$$v=\frac{c\cdot e}{1-\frac{1+p_1}{1+p_2}}$$

v --- Volume of expansion vessel

c --- Total water volume

p_1 --- Pre-set pressure of expansion vessel

p_2 -- The highest pressure during running of the system (that is the action pressure of safety valve.)

e --- The expansion factor of water (the difference between the expansion factor of the original water temperature and that of highest water temperature.)

Water expansion factor in different temperature	
Temperature(℃)	Expansion factor e
0	0.00013
4	0
10	0.00027
20	0.00177
30	0.00435
40	0.00782
45	0.0099
50	0.0121
55	0.0145
60	0.0171
65	0.0198
70	0.0227
75	0.0258
80	0.029
85	0.0324
90	0.0359
95	0.0396
100	0.0434

(3) Filling of Refrigerant

Before shipped out from manufacturer, the outdoor unit has been filled with refrigerant. Additional refrigerant may be filled when carrying out site connection of pipelines.

Check the liquid valve and the gas valve of the outdoor unit. The valves shall be completely shut off.

Connect a vacuum pump to the liquid valve and the gas valve of the outdoor unit to remove air from the inside of the indoor unit and the connecting pipe. Refer to the following figure:

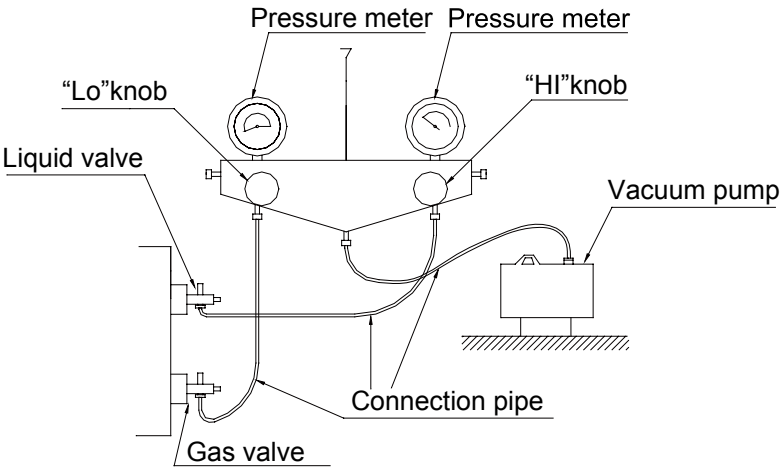

After confirming that there is no leakage from the system, when the compressor is not in operation charge additional R410A working fluid with specified amount to the unit through the filling opening of the liquid pipe valve of the outdoor unit.

1) Be sure to charge the specified amount of refrigerant in liquid state to the liquid pipe:

Since this refrigerant is a mixed refrigerant, adding it in gas form may cause the refrigerant composition to change, preventing normal operation.

2) Before charging, check whether the refrigerant cylinder is equipped with a siphon tube or not.

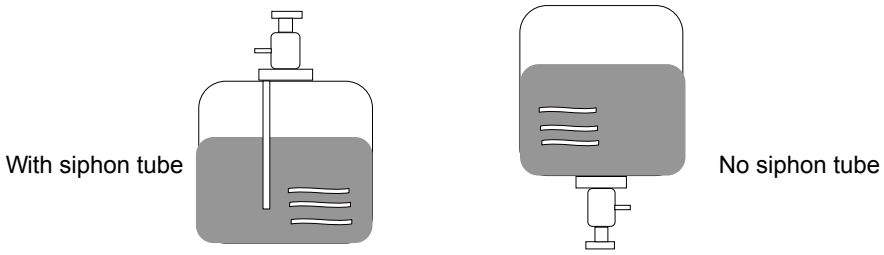

1.6 Connection of Pipeline

(1) Connection of Outlet Pipe for Indoor & Outdoor Unit

- Align the expansion end of copper pipe with the center of threaded joint. Tighten the flaring nuts with your hands.
- Tighten the flaring nuts with torque wrench until you hear a “click”.
- Bend of fitting pipe shall not be too low; otherwise the fitting pipe might crack. Please use pipe bender when bending the fitting pipe.
- When connecting outdoor and indoor unit, never pull the big and small joint of indoor unit with force, so as to prevent the tubes of indoor unit from cracking and causing leakage.
- Connecting pipe shall be supported by a rack without transmitting its weight to other units.

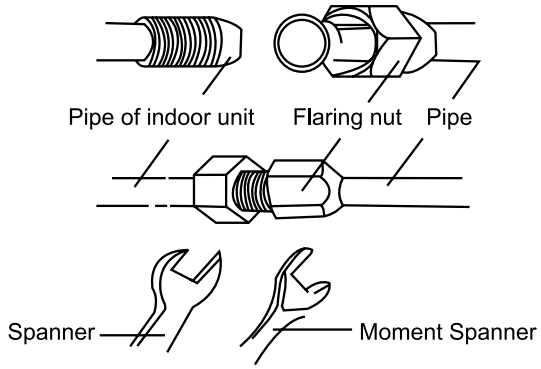

(2) Installation of Protective Layer on Connection Pipe

- To avoid condensate dew or water leakage on connecting pipe, the air pipe and liquid pipe must be wrapped with heat preservation material and adhesive pipe for insulation from the air.
- The joints on indoor unit and outdoor unit must be wrapped with heat preservation materials and have no clearance against the wall surface of indoor unit and outdoor unit.
- Wrap the pipe with tapes.

1) Use the adhesive tape to wrap the connecting pipe and cable into one bundle. To prevent condensate water from overflowing out of the drainpipe, the drainpipe shall be separated from connecting pipe and cable.

2) Wrap the heat preservation tape so that each ring of tape shall press half of the previous ring.

3) Fix the wrapped pipe onto the wall with pipe clamp.

4) Do not wrap the protective tape too tightly, as this will decrease the heat insulation performance.

5) After completing the protection work and wrapping the pipe properly, close the wall holes with sealing materials.

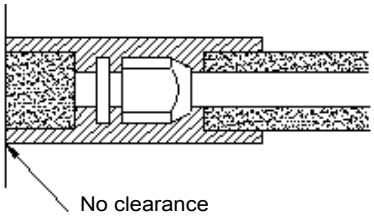

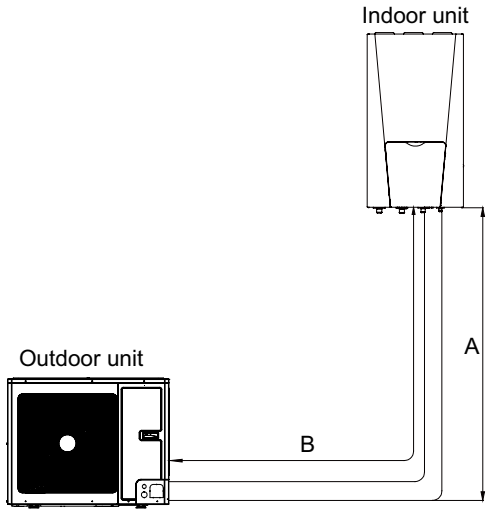

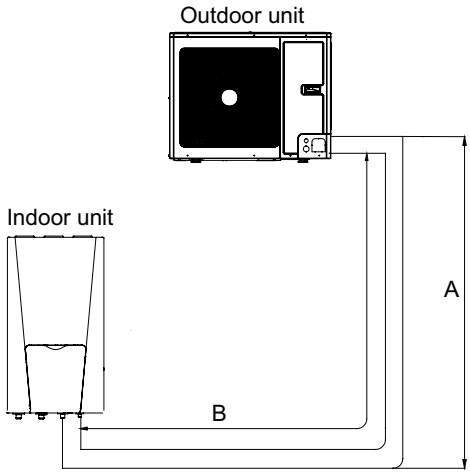

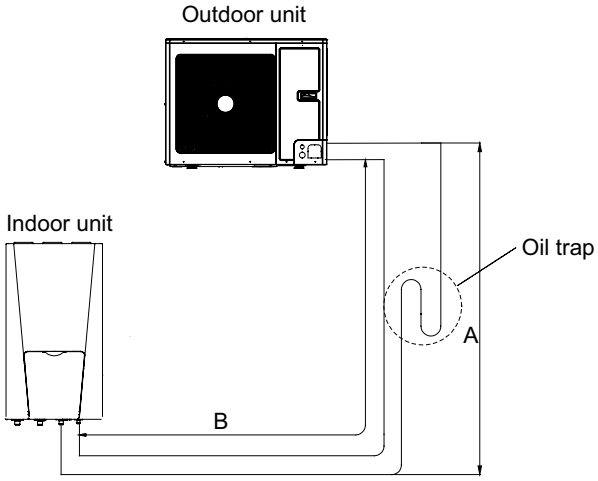

model	Pipe size (Diameter:Φ)		Length B		Elevation A		Additional refrigerant
	Gas	Liquid	Standard	Max.	Standard	Max.	
CH-HP6.0SINK	5/8"	3/8"	5m	30m	0m	15m	50g/m
CH-HP8.0SINK	5/8"	3/8"	5m	30m	0m	15m	50g/m
CH-HP10SINK	5/8"	3/8"	5m	30m	0m	15m	50g/m
CH-HP12SINK	5/8"	3/8"	5m	30m	0m	15m	50g/m
CH-HP14SINK	5/8"	3/8"	5m	30m	0m	15m	50g/m
CH-HP16SINK	5/8"	3/8"	5m	30m	0m	15m	50g/m
CH-HP12SINM	5/8"	3/8"	5m	30m	0m	15m	50g/m
CH-HP14SINM	5/8"	3/8"	5m	30m	0m	15m	50g/m
CH-HP16SINM	5/8"	3/8"	5m	30m	0m	15m	50g/m

Note:

① No additional charge of the refrigerant is need when the pipe length is less than 10 m, if the pipe length is longer than 10m,additional charge of the refrigerant is needed according to the table.

Example:

If 16kw model is installed at a distance of 25m, (25-10)*50=750g refrigerant should be added;

② Rated capacity is based on standard pipe length and maximum allowable length is base on the product reliability in the operation;

③ Oil trap should be installed every 5-7 meters when the location of outdoor unit is higher than indoor unit.

2 ELECTRIC WIRING WORK

2.1 Wiring Principle

(1) General principles

Wires, equipment and connectors supplied for use on the site must be in compliance with provisions of regulations and engineering requirements.

● Only electricians holding qualification are allowed to perform wire connection on the site.

● Before connection work is started, the power supply must be shut off.

● Installer shall be responsible for any damage due to incorrect connection of the external circuit of the unit.

● Caution --- MUST use copper wires.

(2) Connection of power cable to the electric cabinet of the unit

● Power cables should be laid out through cabling trough, conduit tube or cable channel.

● Power cables to be connected into the electric cabinet must be protected with rubber or plastic to prevent scratch by edge of metal plate.

● Power cables close to the electric cabinet of the unit must be fixed reliably to make the power terminal in the cabinet free from an external force.

● Power cable must be grounded reliably.

2.2 PCB Outline

(1) CH-HP6.0SINK(O), CH-HP8.0SINK(O), CH-HP10SINK(O):

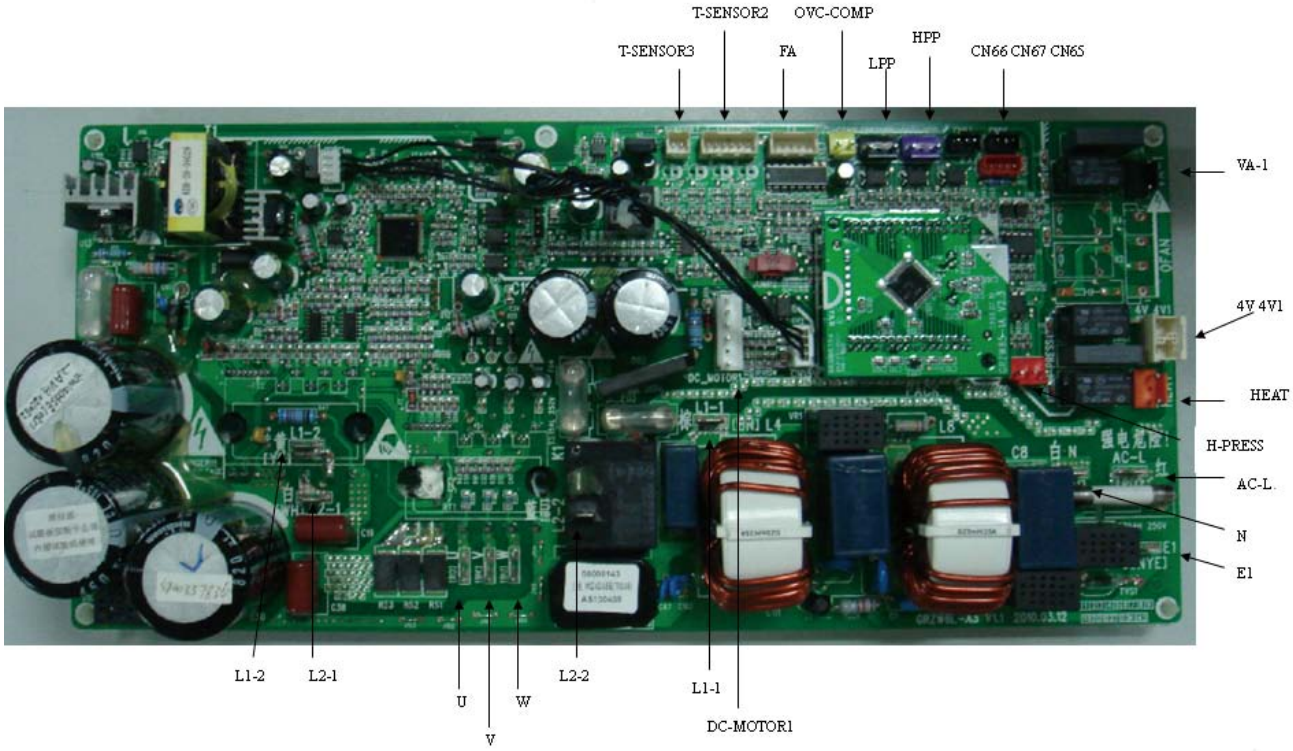

Silk Screen	Specification
AC-L	Live wire input of power supply, red
N	Neutral wire input of power supply, white
E1	Ground wire, yellow green
L2-2	PFC blue inductive wire
L1-1	PFC brown inductive wire
L2-1	PFC yellow inductive wire
L1-2	PFC white inductive wire
U	U-phase of compressor
V	V-phase of compressor
W	W-phase of compressor
DC_MOTOR1	DC fan 1 pin: strong power supply; 3 pin: fan GND; 4 pin: +15V; 5 pin: control signal; 6 pin:feedback signal;
4V 4V1	4-way valve
HEAT	Electric heating tape
VA-1	E-heater of chassis
HPP	High pressure switch
LPP	Low pressure switch
OVC-COMP	Overload protection of compressor
T-SENSOR2	1, 2 hole: pipe temperature; 3, 4 hole: environment; 5, 6 hole: exhaust
T-SENSOR3	1 hole: +3.3V 2 hole: detection ; suction temperature sensor
CN66.CN67	Communication cable 2 pin B, 3pinA
CN65	Communication cable: 1 pin earthed, 2 pin B, 3 pin A, 4 pin+12power supply; It can not be used for communication between outdoor unit and indoor unit;
FA	Pipe electric expansion valve 1-4 pin: driving impulse output; 5 pin: +12V;
H-PRESS	Signal input of pressure sensor 1 pin: GND; 2 pin: signal input; 3 pin: +5V;

(2) CH-HP12SINK(O), CH-HP14SINK(O), CH-HP16SINK(O):

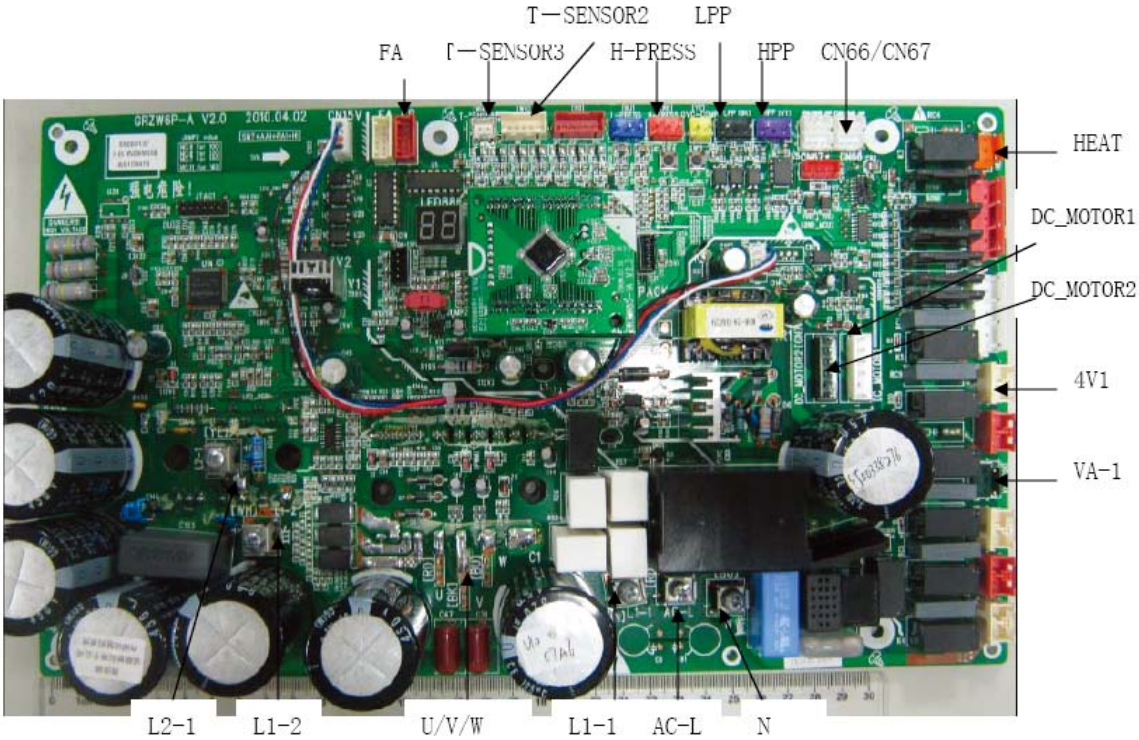

Silk screen	Specification
AC-L	live wire input of power supply, red
N	Neutral line input of power supply(PFC blue inductive wire) blue
L1-1	PFC brown inductive wire
L2-1	PFC yellow inductive wire
L1-2	PFC white inductive wire
U	U-phase of compressor
V	V-phase of compressor
W	W-phase of compressor
DC_MOTOR1	DC fan 1 pin: strong power supply; 3 pin: fan GND; 4 pin: +15V; 5 pin:control signal; 6 pin: feedback signal;
DC_MOTOR2	DC fan 1 pin: strong power supply; 3 pin: fan GND; 4 pin: +15V;5 pin: control signal; 6 pin: feedback signal;
4V1	4-way valve
HEAT	electric heating tape
VA-1	e-heater of chassis
HPP	high pressure switch
LPP	low pressure switch
T-SENSOR2	1, 2hole: pipe temperature; 3, 4hole: environment; 5, 6 hole: exhaust;
T-SENSOR3	1 hole:+3.3V 2 hole: detection: suction temperature sensor
CN66, CN67	communication cable 2 pin B, 3 pin A
CN65	communication cable 1 pin earthed, 2 pin B, 3 pin A, 4 pin+12 power supply It can not be used for communication between outdoor unit and indoor unit.
FA	pipe electric expansion valve 1-4 pin: driving impulse output; 5 pin: +12V;
H-PRESS	signal input of pressure sensor 1 pin: GND; 2 pin: signal input; 3 pin: +5V;

(3) CH-HP12SINM(O), CH-HP14SINM(O), CH-HP16SINM(O)

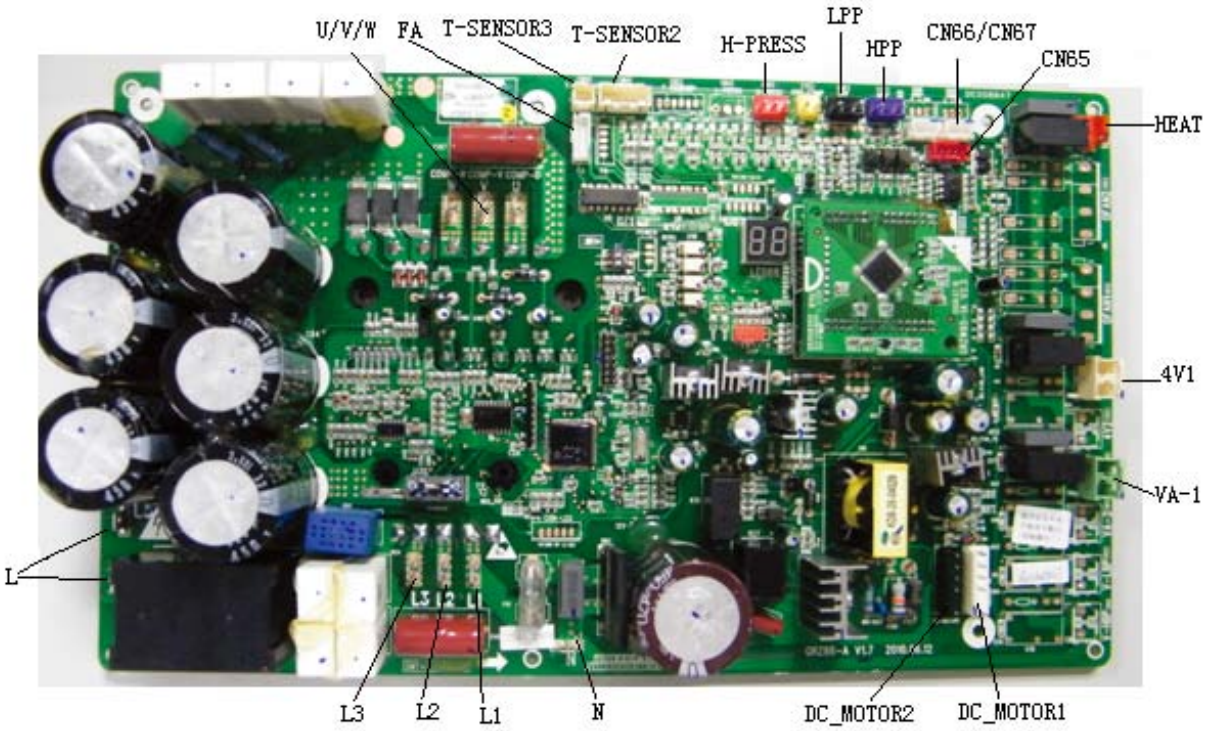

Silk screen	Specification
L1	live wire input of power supply
L2	
L3	
N	Neutral line input of power supply
L	Reactor red inductive wire
U	U-phase of compressor
V	V-phase of compressor
W	W-phase of compressor
DC_MOTOR1	DC fan 1 pin:strong power supply;3 pin:fan GND;4 pin:+15V;5 pin:control signal;6 pin:feedback signal;
DC_MOTOR2	DC fan 1 pin:strong power supply;3 pin:fan GND;4 pin:+15V;5 pin:control signal;6 pin:feedback signal;
4V1	4-way valve
HEAT	electric heating tape
VA-1	e-heater of chassis
HPP	high pressure switch
LPP	low pressure switch
T-SENSOR2	1, 2hole:pipe temperature;3, 4hole:environment;5, 6hole:exhaust
T-SENSOR3	1 hole:+3.3V 2 hole: detection: suction temperature sensor
CN66,CN67	communication cable 2 pin B,3 pin A
CN65	communication cable 1 pin earthed,2 pin B,3 pin A,4 pin+12 power supply It can not be used for communication between outdoor unit and indoor unit.
FA	pipe electric expansion valve 1-4 pin:driving impulse output;5 pin:+12V;
H-PRESS	signal input of pressure sensor 1 pin:GND;2 pin:signal input;3 pin:+5V

(4) CH-HP6.0SINK(I), CH-HP8.0SINK(I), CH-HP10SINK(I), CH-HP12SINK(I), CH-HP14SINK(I), CH-HP16SINK(I), CH-HP12SINM(I), CH-HP14SINM(I), CH-HP16SINM(I):

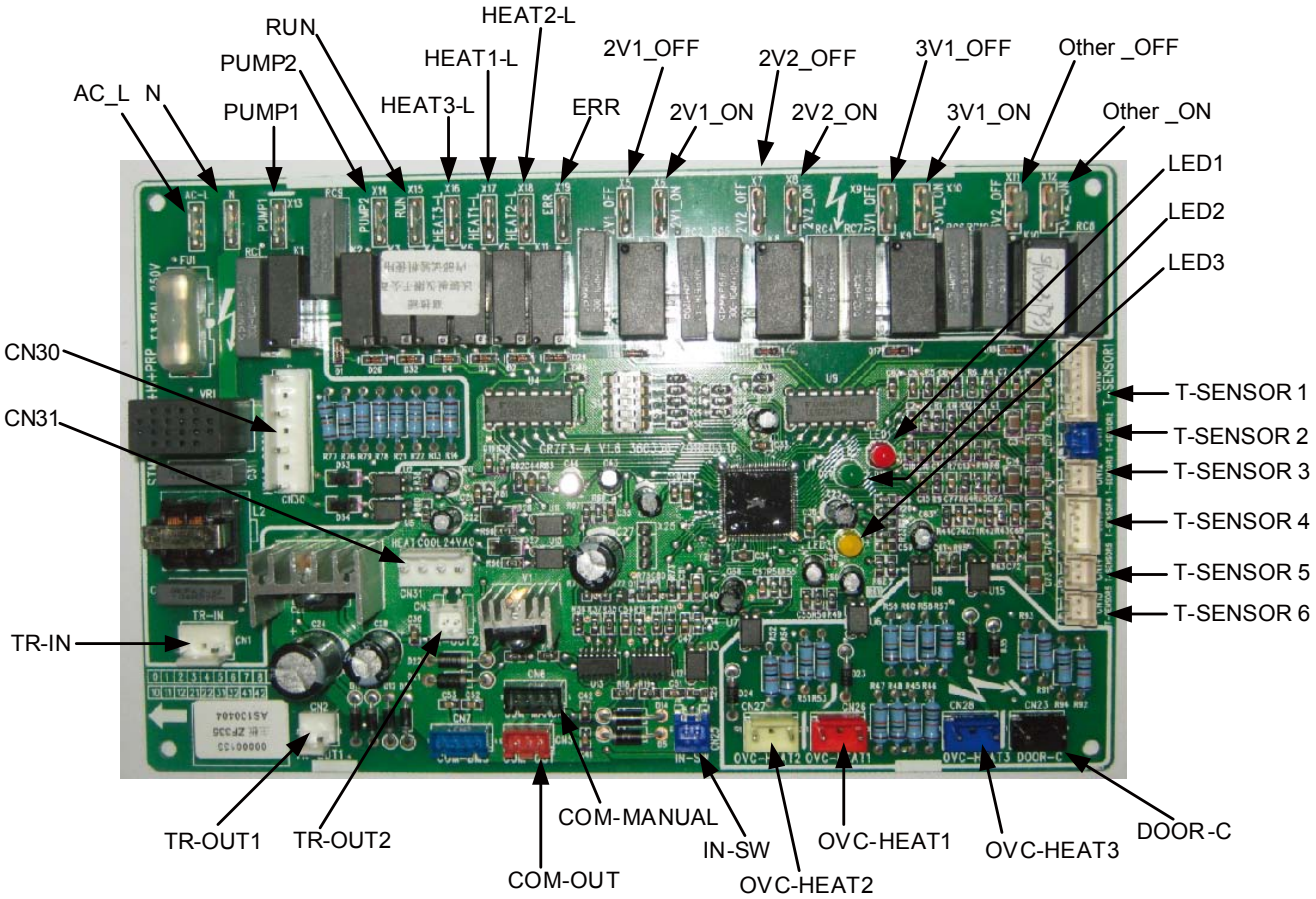

Silk screen	Location	Specification
AC-L	-	live wire of power supply
N	-	Neutral wire of power supply
PUMP1	X13	live wire of indoor water pump
PUMP2	X14	live wire of solar water pump
RUN	X15	running indicator
HEAT3-L	X16	e-heater of water tank
HEAT1-L	X17	e-heater of indoor unit 1
HEAT2-L	X18	e-heater of indoor unit 2
ERR	X19	error indicator
2V1_OFF	X5	Electric magnetic 2-way valve1 is normally closed.
2V1_ON	X6	Electric magnetic 2-way valve1 is normally open.
2V2_OFF	X7	Electric magnetic 2-way valve2 is normally closed.
2V2_ON	X8	Electric magnetic 2-way valve2 is normally open.
3V1_OFF	X9	Electric magnetic 3-way valve1 is normally closed.
3V1_ON	X10	Electric magnetic 3-way valve1 is normally open.
Other _OFF	X11	Other auxiliary is normally closed.
Other _ON	X12	Other auxiliary is normally open.

T-SENSOR1	CN10	terminal of temperature sensor1
T-SENSOR2	CN11	terminal of temperature sensor2
T-SENSOR3	CN12	terminal of temperature sensor3
T-SENSOR4	CN13	terminal of temperature sensor4
T-SENSOR5	CN14	terminal of temperature sensor5
T-SENSOR6	CN15	terminal of temperature sensor6
DOOR-C	CN23	Door detection input
OVC-HEAT3	CN28	e-heater of water tank adhesion-proof protection detector
OVC-HEAT1	CN26	e-heater of indoor unit1 adhesion-proof protection detector
OVC-HEAT2	CN27	e-heater of indoor unit2 adhesion-proof protection detector
IN-SW	CN25	detection input of water flow switch
COM-MANUAL	CN6	connect the wired controller
COM-OUT	CN5	connect to outdoor unit
TR-OUT1	CN2	transformer output 1
TR-OUT2	CN3	transformer output 2
TR-IN	CN1	220V input of transformer
CN30	CN30	heavy-current interface of end controller
CN31	CN31	heavy-current interface of end controller

2.3 Electric Wiring Design

2.3.1 Wiring Diagram: Indoor Unit

● CH-HP6.0SINK(I) ,CH-HP8.0SINK(I),CH-HP10SINK(I),CH-HP12SINK(I) ,CH-HP14SINK(I),CH-HP16SINK(I):

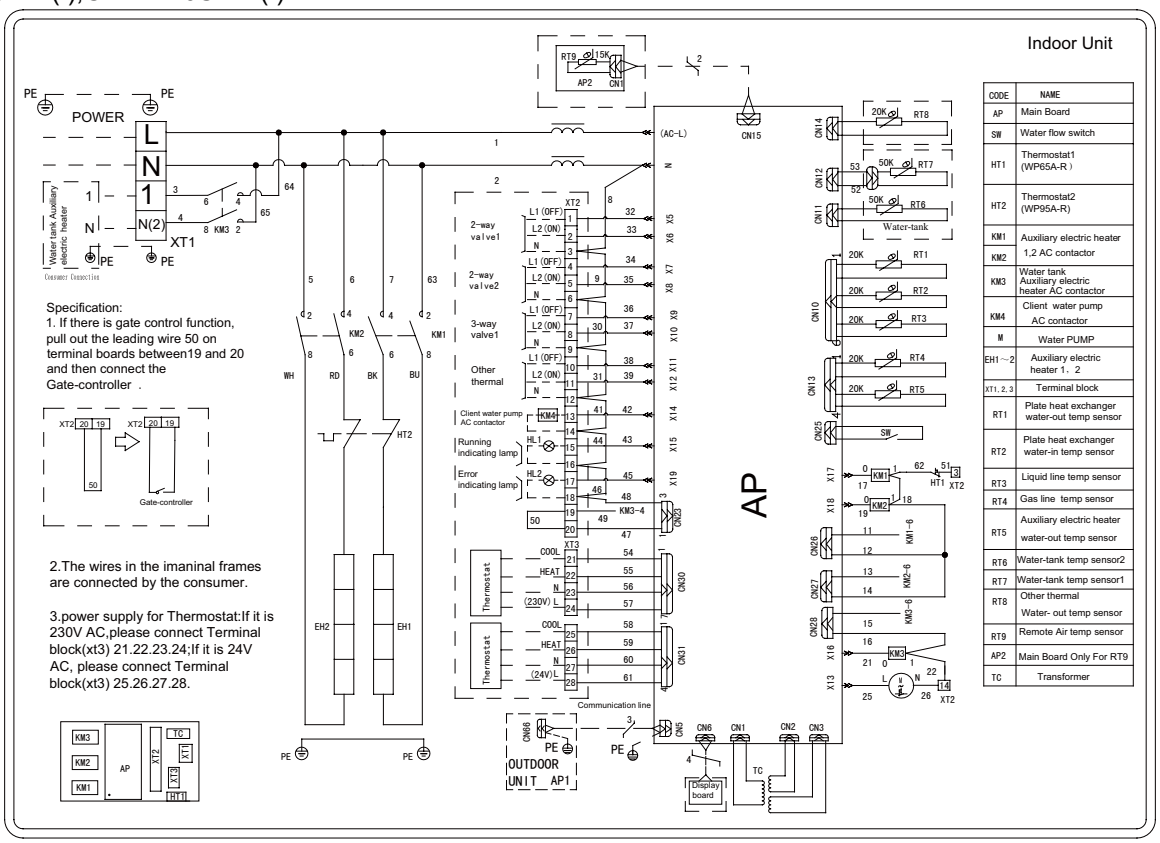

● CH-HP12SINM(I),CH-HP14SINM(I),CH-HP16SINM(I)

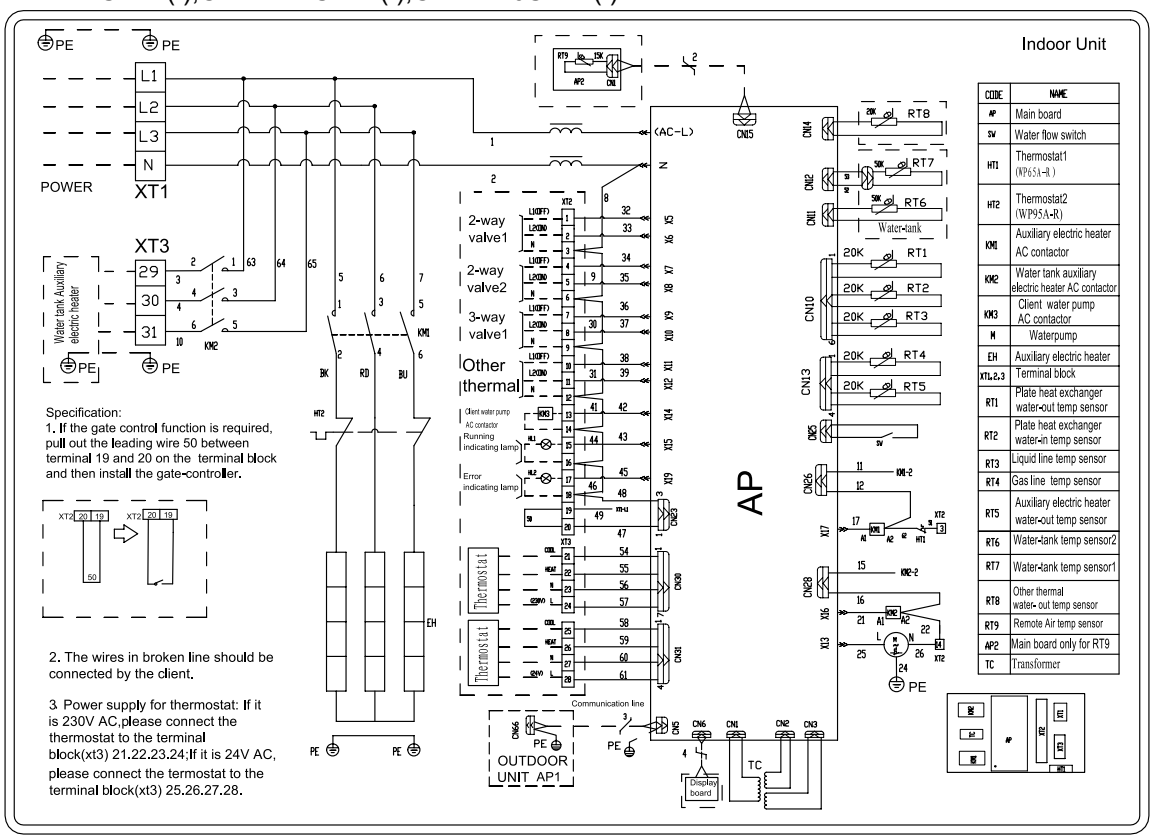

2.3.2 Wiring Diagram: Outdoor Unit

- CH-HP6.0SINK(O),CH-HP8.0SINK(O),CH-HP10SINK(O):

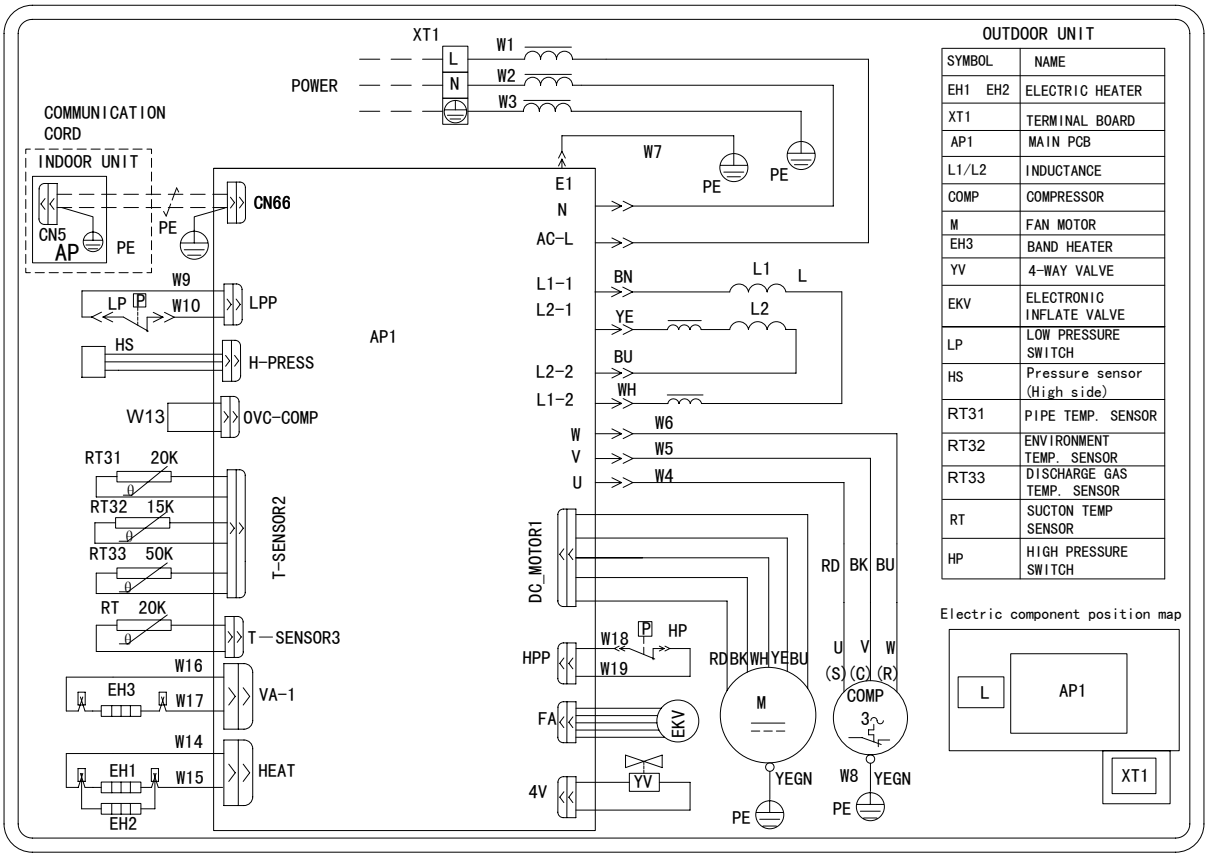

- CH-HP12SINK(O),CH-HP14SINK(O),CH-HP16SINK(O):

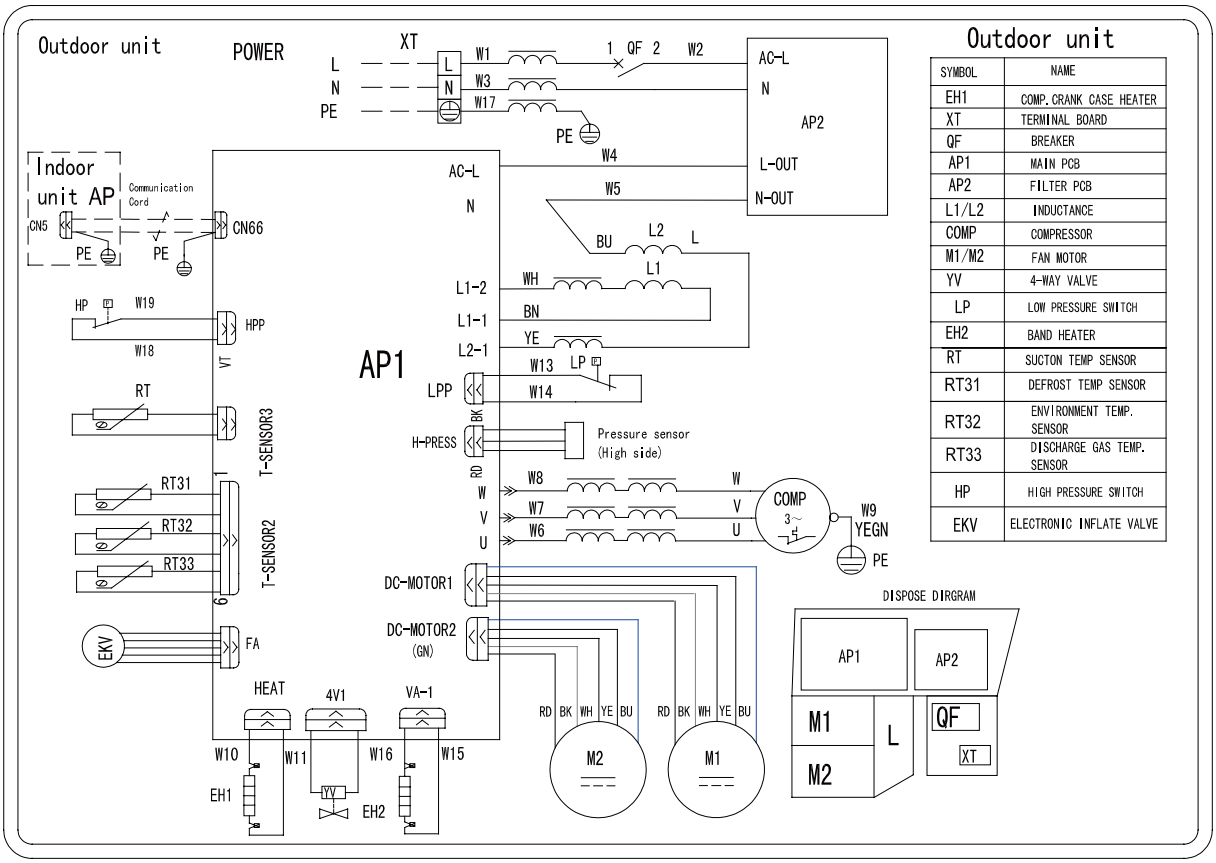

● CH-HP12SINM(O),CH-HP14SINM(O),CH-HP16SINM(O):

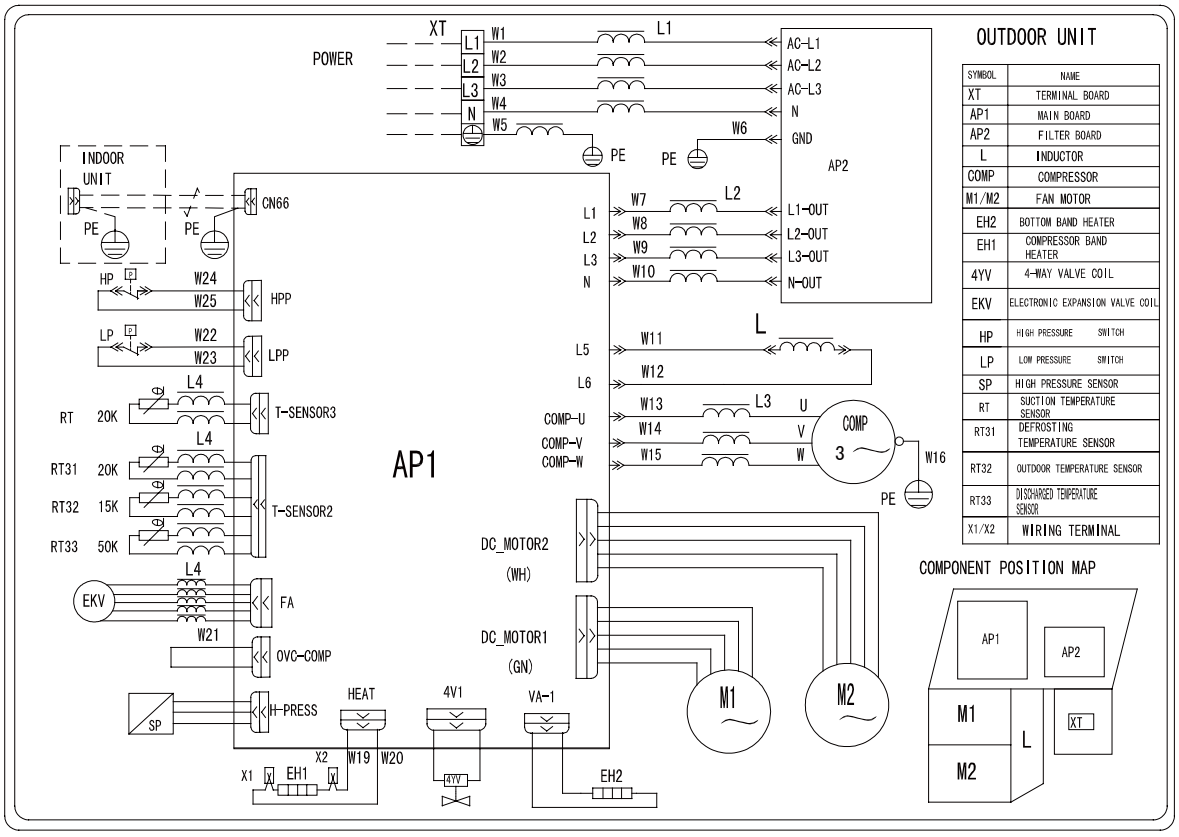

2.3.3 Wiring Diagram: Water Tank

- WT200FH3EK, WT2002FH3EK, WT300FH3EK, WT3002FH3EK:

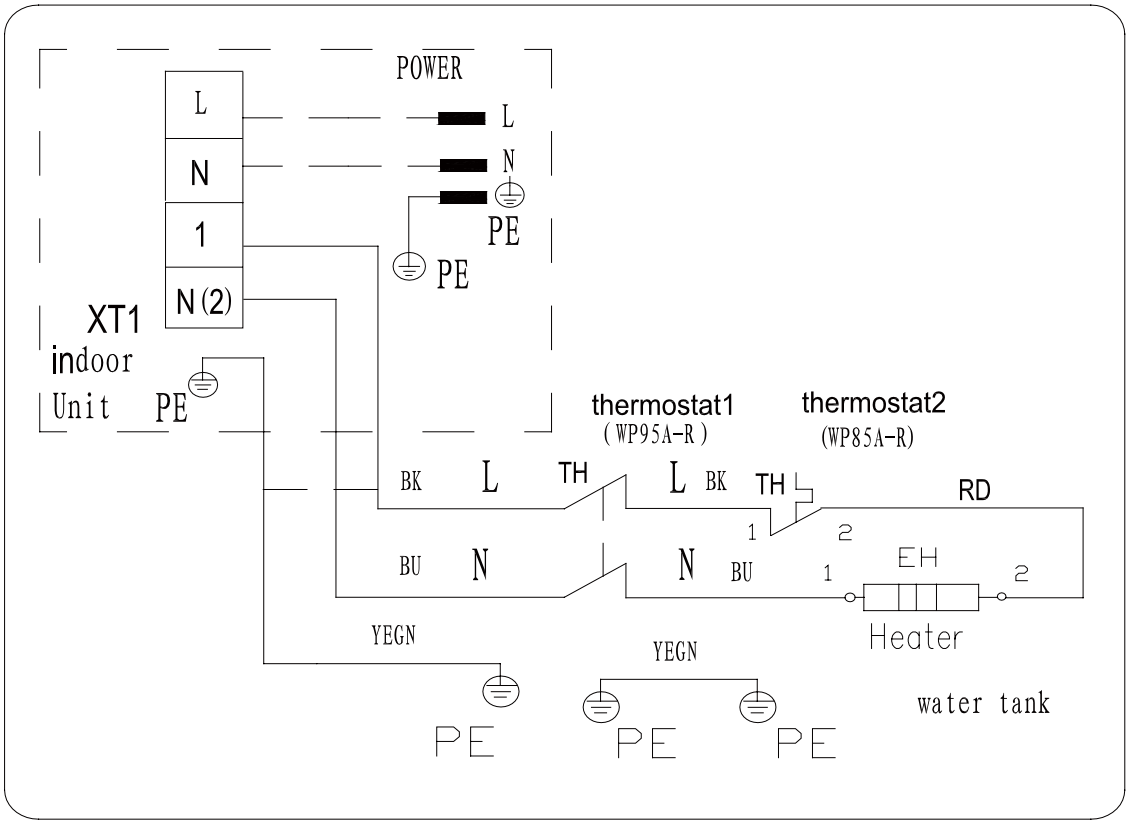

- WT200FH3EM, WT2002FH3EM, WT300FH3EM, WT3002FH3EM:

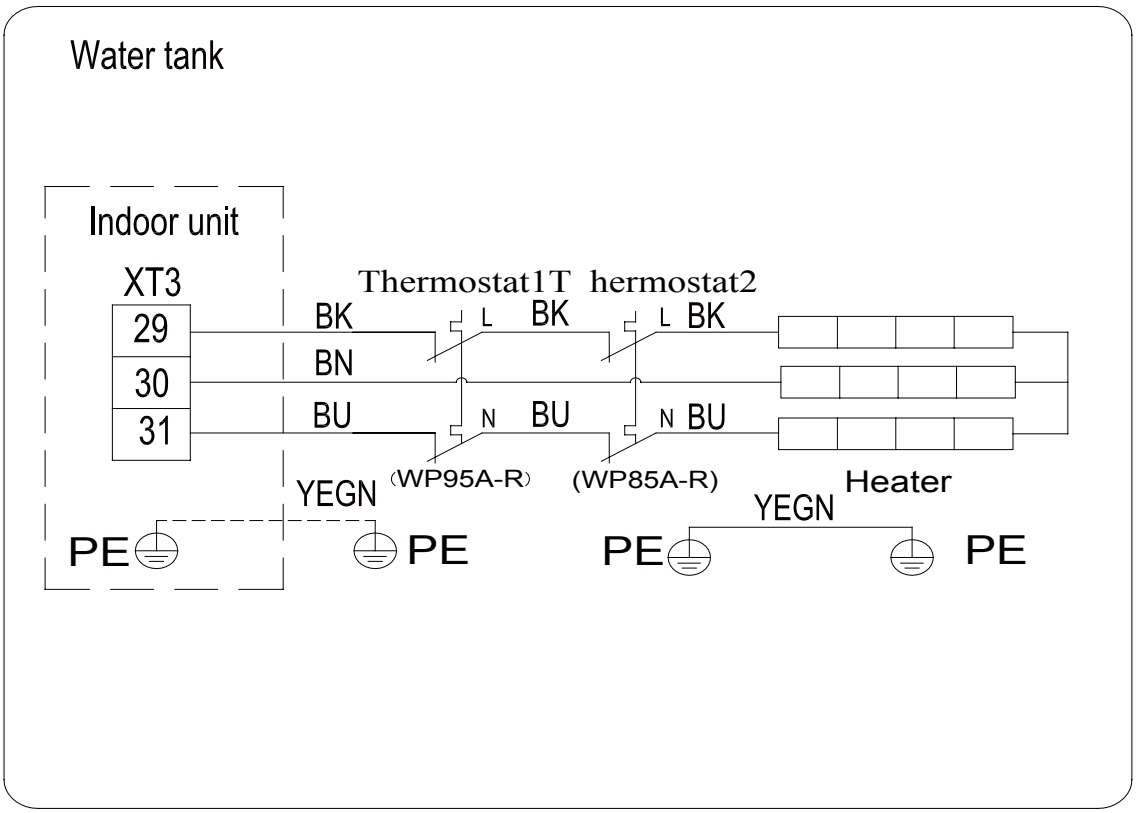

2.3.4 Wiring Diagram: Indoor and Outdoor Unit (Including Field Wiring)

● CH-HP6.0SINK, CH-HP8.0SINK, CH-HP10SINK,CH-HP12SINK, CH-HP14SINK, CH-HP16SINK:

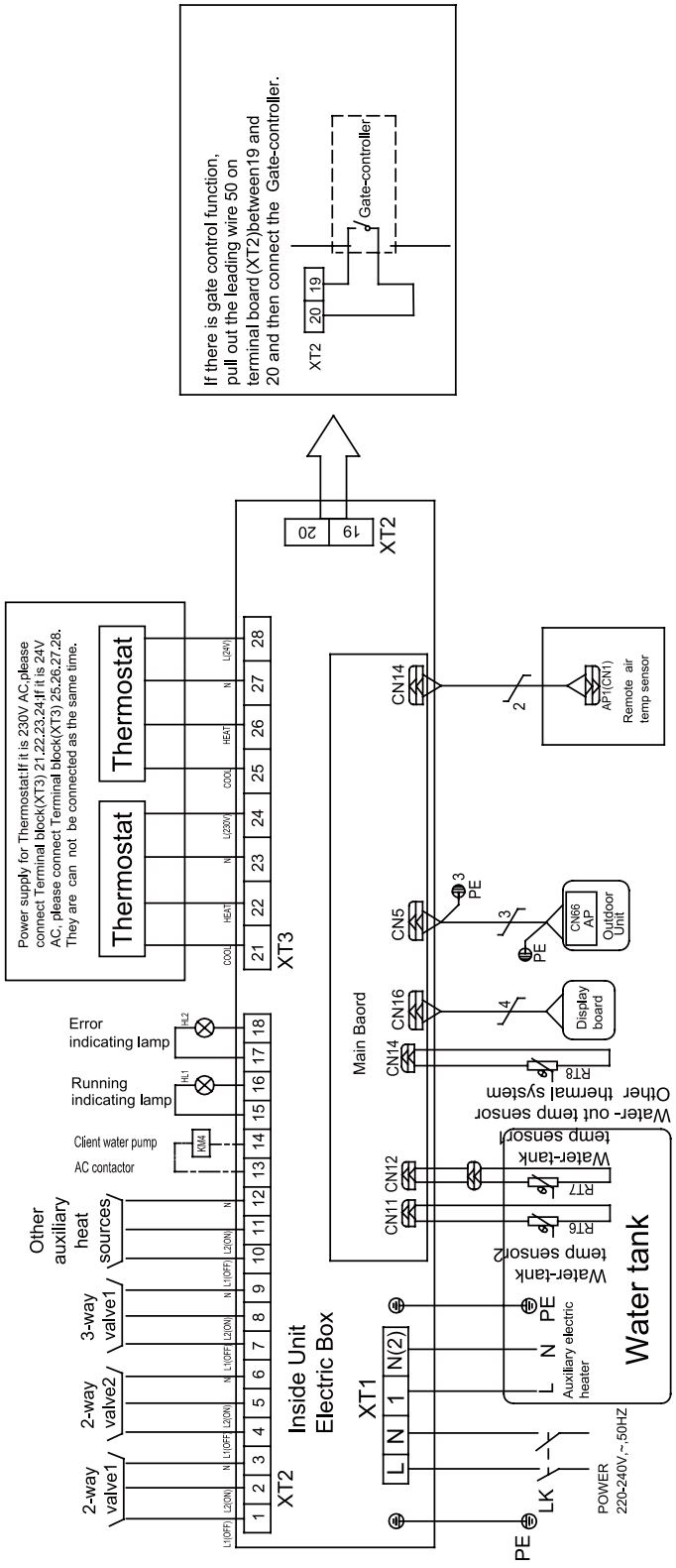

Specification:

1、Running indicating lamp(HL1) and Error indicating lamp (HL2) are connected or not on the basis of the clients'demand.

2、Client water pump AC contactor(KM4) is back-up Pump for the future , so it is not be connect;

3、Leakage Switch（LK） is necessary for additional installation, Please reference to 17.4.2 Specification of Power Supply Wire and Leakage Switch.

● CH-HP12SINM, CH-HP14SINM, CH-HP16SINM:

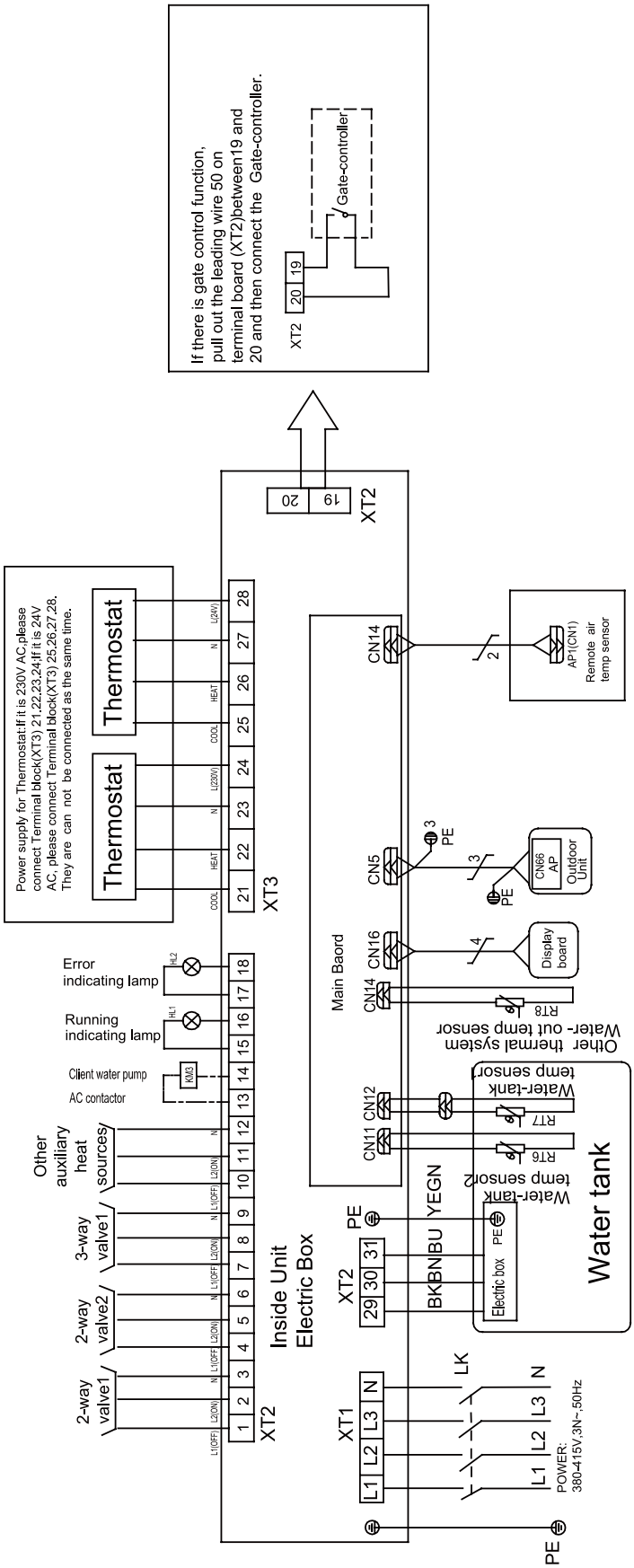

Specification:

1、Running indicating lamp(HL1) and Error indicating lamp (HL2) are connected or not on the basis of the clients'demand.

2、Client water pump AC contactor(KM3) is back-up Pump for the future , so it is not be connect;

3、Leakage Switch（LK） is necessary for additional installation, Please reference to 17.4.2 Specification of Power Supply Wire and Leakage Switch.

2.3.5 Terminal Board Information

- CH-HP6.0SINK, CH-HP8.0SINK, CH-HP10SINK, CH-HP12SINK, CH-HP14SINK, CH-HP16SINK:

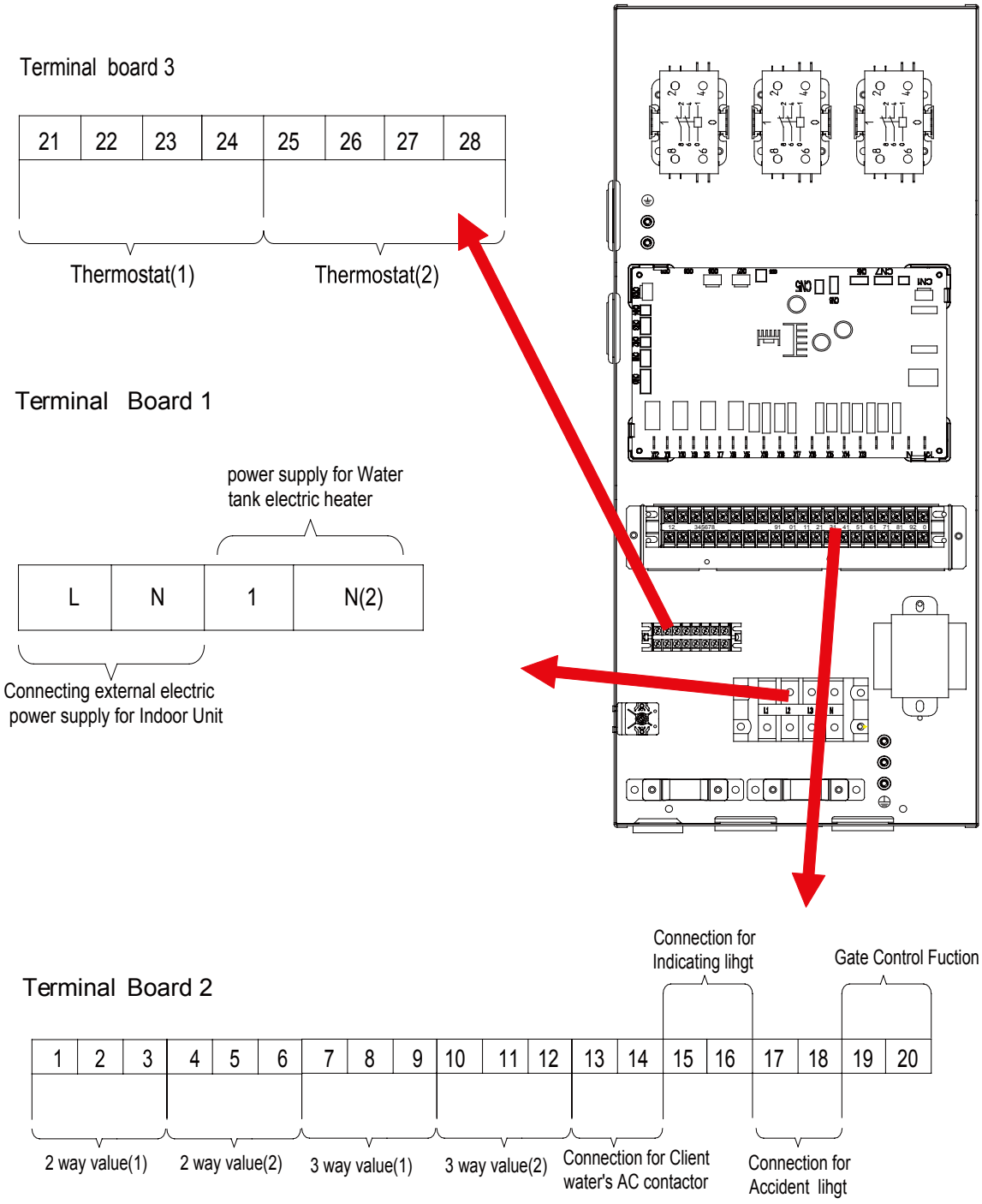

● CH-HP12SINM, CH-HP14SINM, CH-HP16SINM:

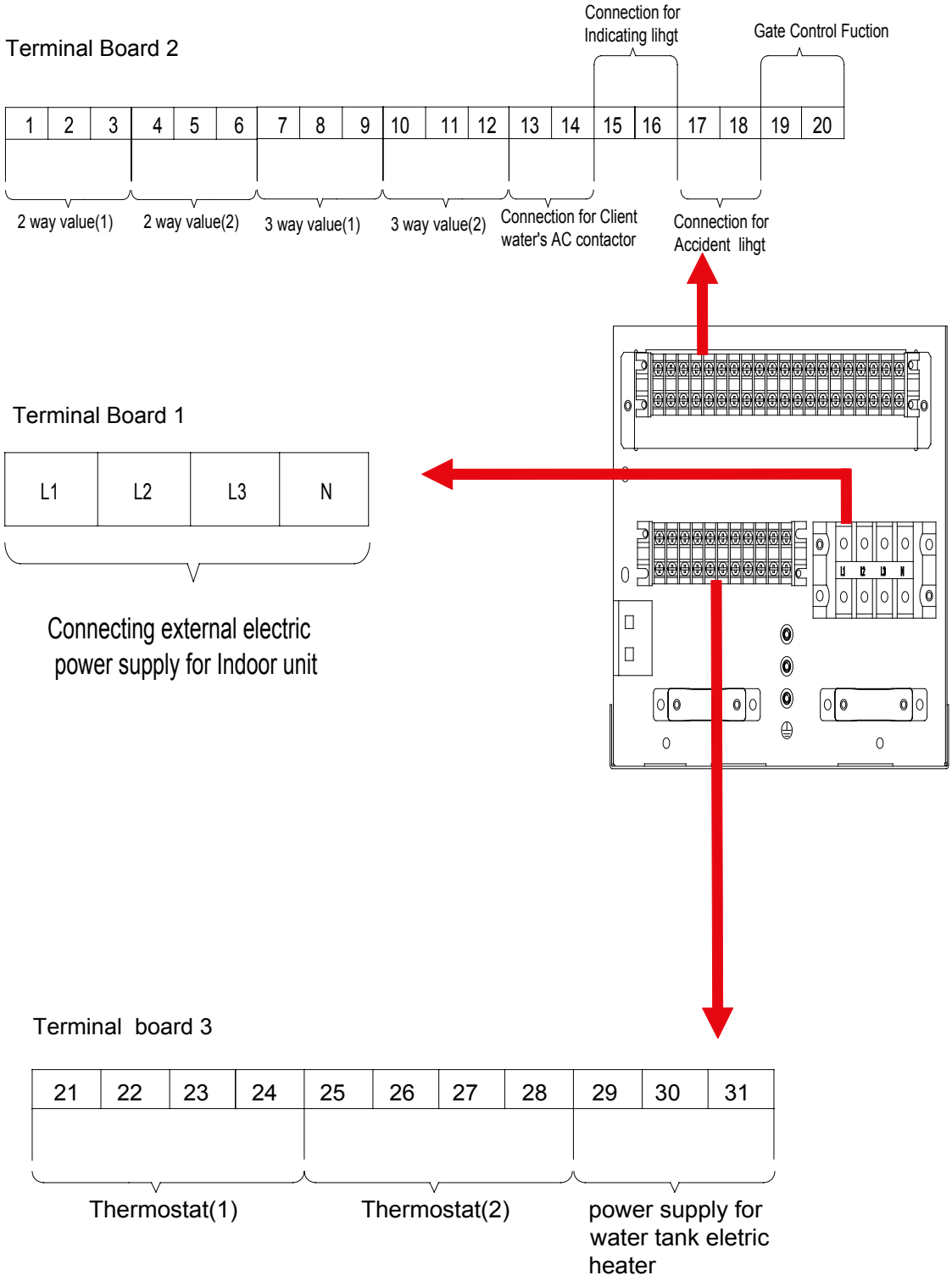

2.3.6 Connecting with External Electric

● CH-HP6.0SINK, CH-HP8.0SINK, CH-HP10SINK, CH-HP12SINK, CH-HP14SINK, CH-HP16SINK:

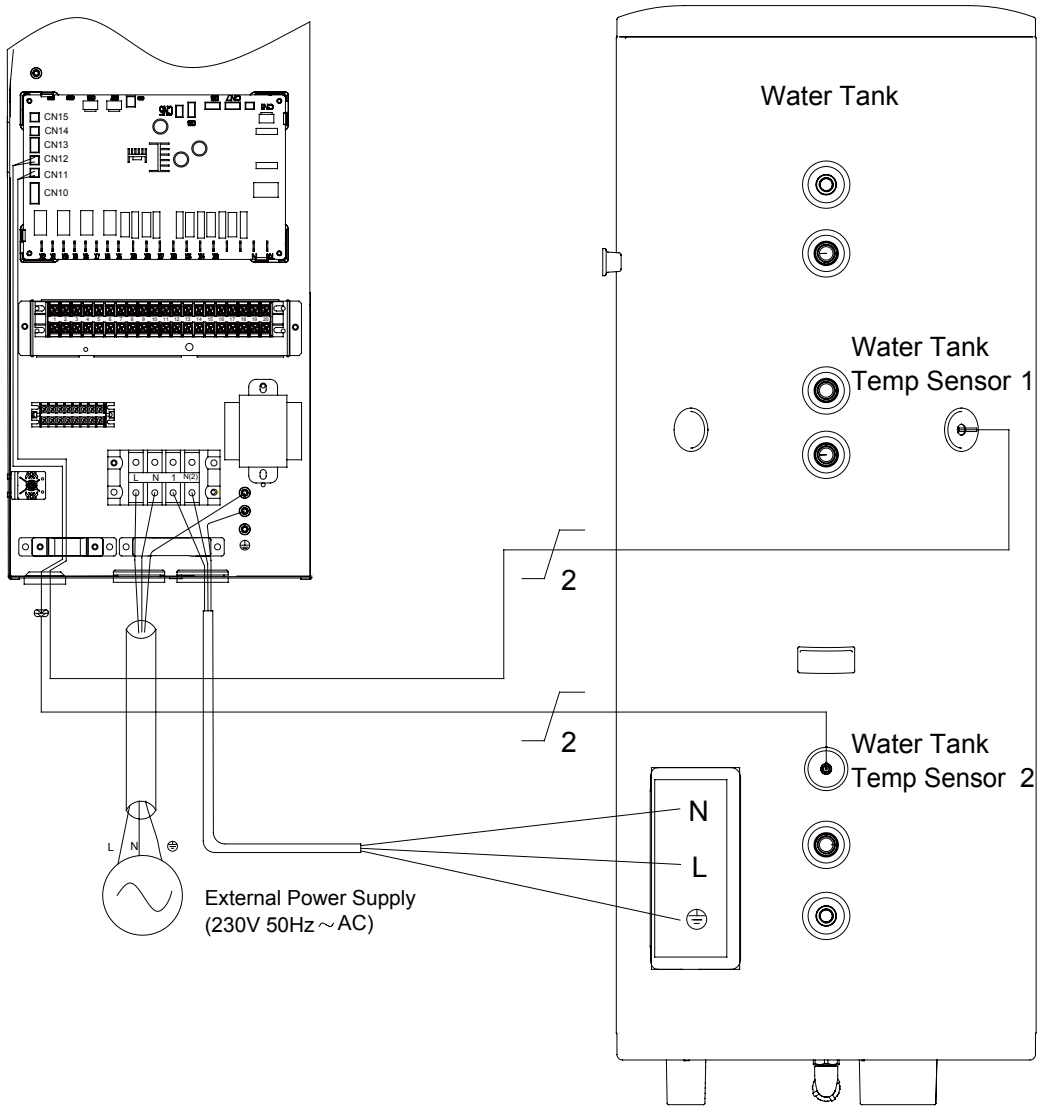

● CH-HP12SINM, CH-HP14SINM, CH-HP16SINM:

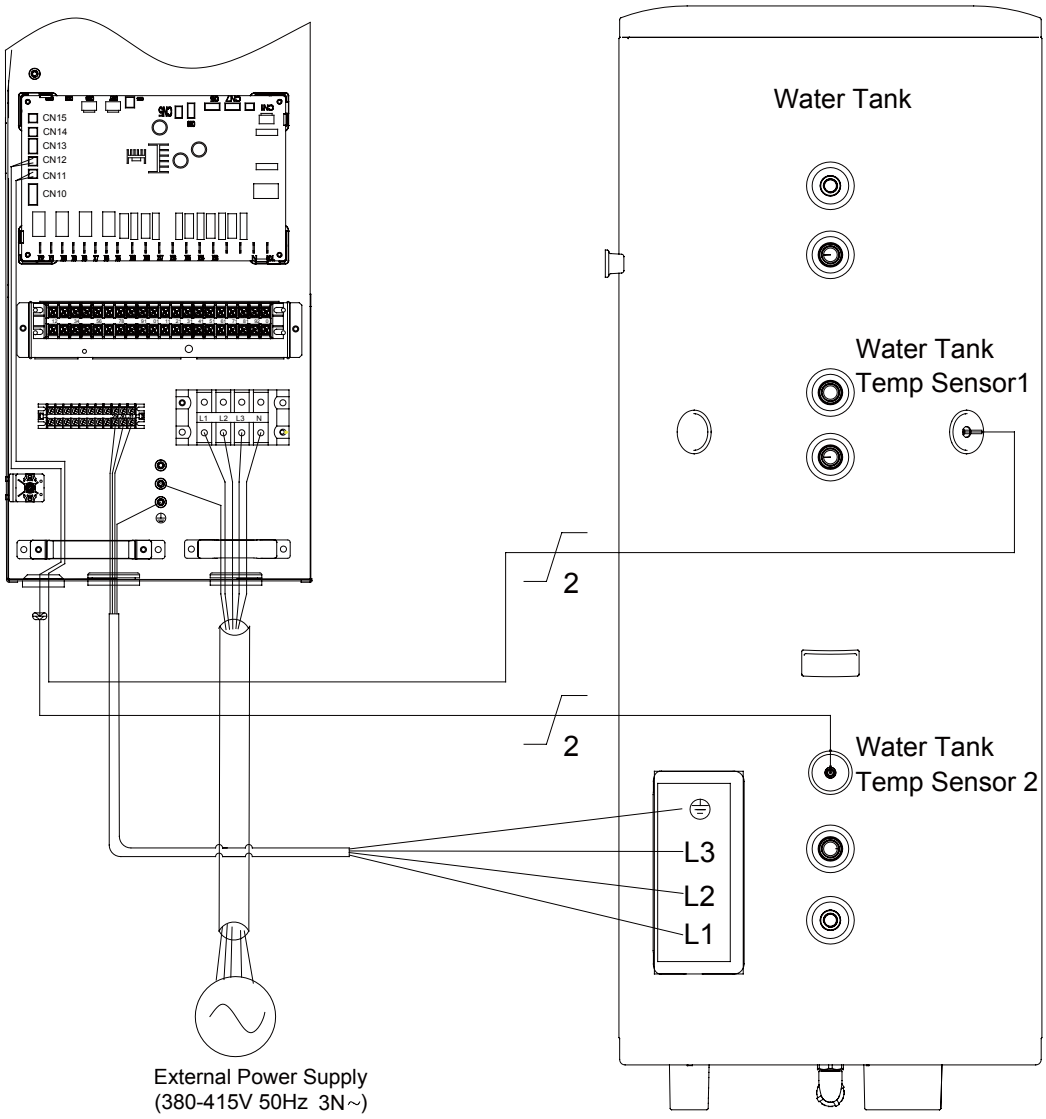

2.3.7 2-Way Valve

2-way valve is required to control water flow while cooling operation. Role of 2-way valve is to cut off water flow into under floor loop in cooling mode when fan coil unit is equipped for cooling operation.

General Information

Type	Power	Operating Mode	Supported
NO 2-wire	230V 50Hz ~AC	Closing water flow	Yes
		Opening water flow	Yes
NC 2-wire	230V 50Hz ~AC	Closing water flow	Yes
		Opening water flow	Yes

(1) Normal Open type. When electric power is NOT supplied, the valve is open. (When electric power is supplied, the valve is closed.)

(2) Normal Closed type. When electric power is NOT supplied, the valve is closed. (When electric power is supplied, the valve is open.)

How to Wire 2-Way Valve:

Follow below procedures Step 1 ~ Step 2.

Step 1. Uncover front cover of the indoor unit and open the control box.

Step 2. Find terminal block and connect wire as below.

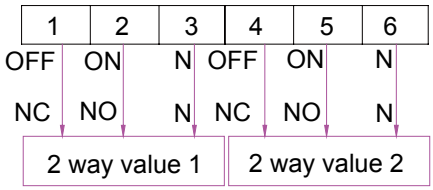

⚠ **WARING!**

① Normal Open type should be connected to wire (NO) and wire (N)for valve closing in cooling mode.
② Normal Closed type should be connected to wire (NC) and wire (N)for valve closing in cooling mode.
(NO) : Line signal (for Normal Open type) from PCB to 2-way valve
(NC) : Line signal (for Normal Closed type) from PCB to 2-way valve
(N) : Neutral signal from PCB to 2-way valve

The 2-way value 2 is reserved without any control program. At the field installation, it should be wired at the terminal board of the 2-way valve 1.

Other auxiliary heat sources are allowed for the equipment and controlled in such a way that the mainboard will output 230V strong signals when outdoor temperature is lower than the set point for startup of the auxiliary heat source.

2.3.8 3-Way Valve

3-way valve is required to operate sanitary water tank. Role of 3-way valve is flow switching between under floor heating loop and water tank heating loop.

General Information

Type	Power	Operating Mode	Supported
SPDT 3-wire	230V 50Hz ~AC	Selecting “Flow A” between “Flow A” and “Flow B”	Yes
		Selecting “Flow B” between “Flow B” and “Flow A”	Yes

(1) SPDT = Single Pole Double Throw. Three wires consist of Live1 (for selecting (for selecting Flow B), and Neutral (for common).
(2) Flow A means ‘water flow from the indoor unit to under floor water circuit.’
(3) Flow B means ‘water flow from the indoor unit to sanitary water tank.’

How to Wire 3-Way Valve:
Follow below procedures Step 1 ~ Step 2.
Step 1. Uncover front cover of the indoor unit and open the control box.
Step 2. Find terminal block and connect wire as below.

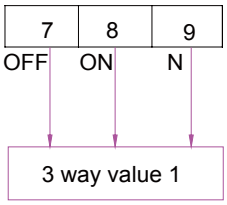

⚠ **WARING!**

① 3-way valve should select water tank loop when electric power is supplied to wire (ON) and wire (N).
② 3-way valve should select under floor loop when electric power is supplied to wire (OFF) and wire (N).
(ON) : Line signal (Water tank heating) from PCB to 3-way valve
(OFF) : Line signal (Under floor heating) from PCB to 3-way valve
(N) : Neutral signal from PCB to 3-way valve

2.3.9 Other Auxiliary Heat Sources

Other auxiliary heat sources are allowed for the equipment and controlled in such a way that the mainboard will output 230V when outdoor temperature is lower than the set point for startup of the auxiliary heat source.

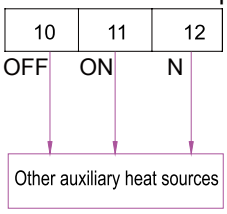

2.3.10 Gate-controller

If there is gate control function, pull out the leading wire 50 on terminal board(XT2) between19 and 20 or between 21 and 22, and then connect the Gate-controller .

Installation Guide follow as:

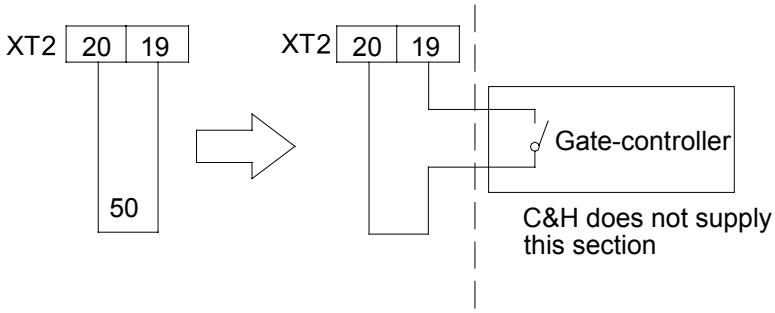

2.3.11 Remote Air Temperature Sensor

Front side

Back side

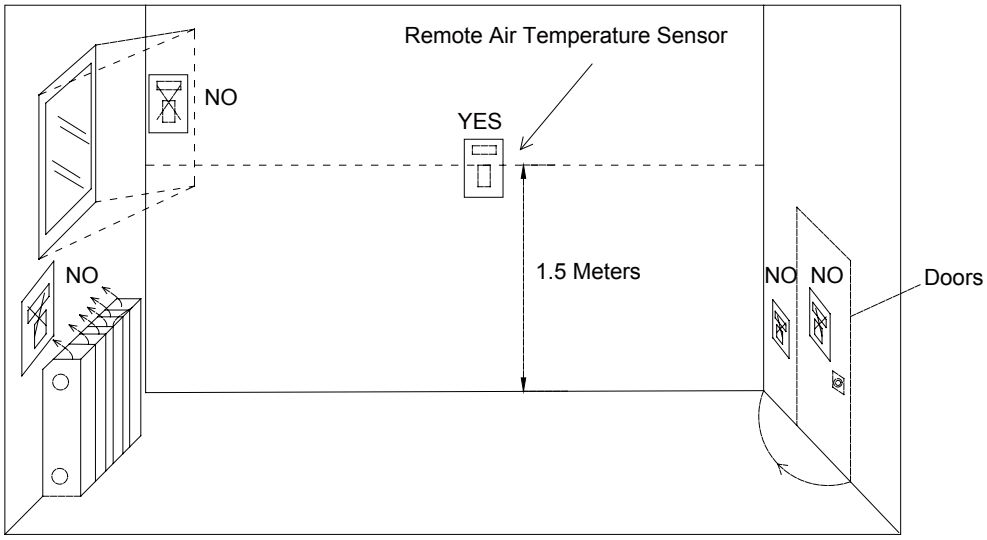

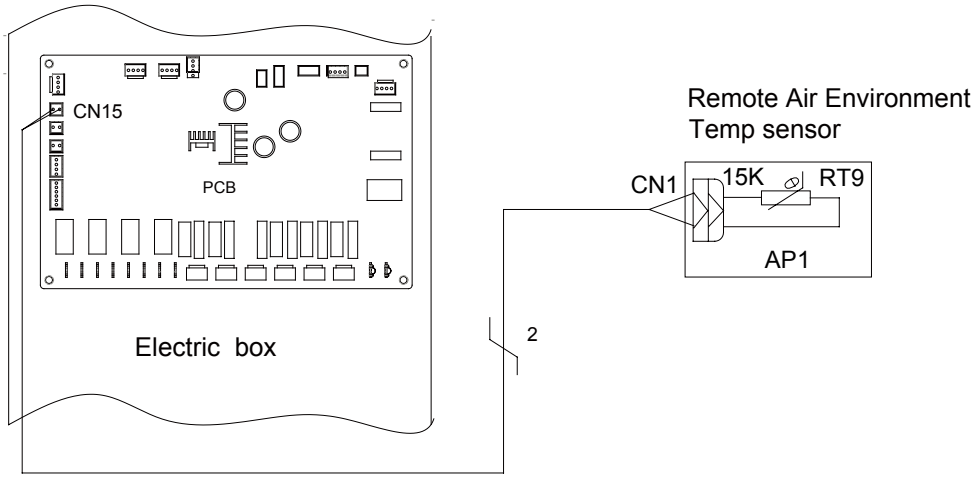

Note:

① Distance between the indoor unit and the remote air temperature senor should be less than 15 meter due to length of the connection cable of remote air temperature sensor;

② Height from floor is approximately 1.5 meter;

③ Remote air temperature sensor can not be located where the area may be hidden when door is open;

④ Remote air temperature sensor can not be located where external thermal influence may be applied;

⑤ Remote air temperature sensor should be installed where space heating is mainly applied;

⑥ After the Remote air temperature sensor is installed, should be set the value form “0”to“1” at the function code 1 in the control panel, so as to select remote air temperature to the control point.

2.3.11 Thermostat

Installation of Thermostat is very similar to that of Remote air temperature sensor.

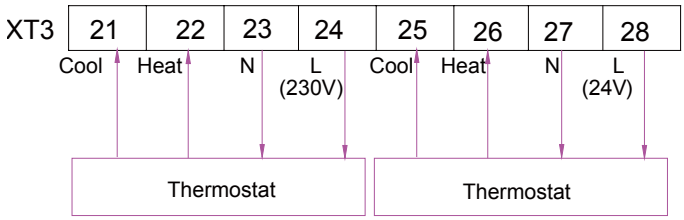

Fig .1

How to Wire Thermostat

(1) Uncover the front cover of the indoor unit and open the control box.

(2) Identify the power specification of the thermostat, if it is 230V , find terminal block XT3 as NO.21~24 or NO.23~26; Otherwise, if it is 24V, find terminal block XT3 as NO.25~28 or NO.27~30;

(3) If it is Heating/Cooling thermostat, please connect wire as Fig 1 ;

⚠ **CAUTION!**

① NEVER USE 230V AC and 24V AC Thermostat at the same time, otherwise, it will cause short-circuit and power cut-off by circuit breaker;

② Setting temperature by Thermostat(heating or cooling) should be chosen within the setting temperature range of the product ;

③ For other constrains, please refer to previous page where constrains about remote air temperature sensor

④ Do not connect external electric loads, Wire (L) and (N) should be used only for operation Electric type thermostat.

⑤ Never connect external electric loads such as valves, fan coil units, etc. If connected, PCB of the indoor unit can be seriously damaged.

⑥ Installation of Thermostat is very similar to that of Remote air temperature sensor.

MAINTENANCE

UNITS MAINTENANCE

1 ERROR CODE LIST

1) Complete Unit Code

Code Indication	Error Name	Source of Error Signal	Control Description
F4	Ambient temperature sensor error	● The plug on temperature sensor is not correctly connected to the socket on mainboard. ● The resistance of temperature sensor is not correct.	It will be automatically cleared after the failure is removed.
F6	Condenser temperature sensor error	● The plug on temperature sensor is not correctly connected to the socket on mainboard. ● The resistance of temperature sensor is not correct.	It will be automatically cleared after the failure is removed.
F7	Discharge temperature sensor error	● The plug on temperature sensor is not correctly connected to the socket on mainboard. ● The resistance of temperature sensor is not correct.	It will be automatically cleared after the failure is removed.
F5	Suction temperature sensor error	● The plug on temperature sensor is not correctly connected to the socket on mainboard. ● The resistance of temperature sensor is not correct.	It will be automatically cleared after the failure is removed.
EF	Outdoor fan error	● Mainboard of outdoor unit is damaged. ● The wire connecting the wiring terminals of the mainboard breaks.	If it occurs for 3 times during one hour, it is cleared by de-energization. If it occurs for less than 3 times, it will be automatically cleared.
E5	Overload protection of compressor or driver error	● It is the compressor overload switch error or the compressor drive protection, and please see the indicating lamp on the main board of the outdoor unit or the 88 nixie tube for the protection code.	Drive failure; it will be automatically cleared after 1 min.
E1	High pressure protection	● Comp High-pressure switch is broken or the wiring is loose. ● The water in the tank is not enough. ● The installation of tank temp sensor is not correct. ● The gas valve and liquid valve are not fully open. ● The electric expansion valve can not work normally.	De-energize the unit and then, energize it again. If the malfunction is removed, the code will be cleared.
E3	Low pressure protection	● Comp Low-pressure switch is broken or the wiring is loose. ● The system has leaked. ● The fans stop running or reverse.	If it occurs for 2 times during 40 minutes, it is cleared by de-energization or turnning off. If it occurs for less than 2 times, it will be automatically cleared.
E4	High discharge protection	● The resistance of temperature sensor is not correct. ● The electric expansion valve is blocked. ● The system has leaked. ● Mainboard of outdoor unit is damaged.	If it occurs for 3 times during one hour, it is cleared by de-energization. If it occurs for less than 3 times, it will be automatically cleared.

C5	Indoor capacity switch error		De-energize the unit and then, energize it again. If the malfunction is removed, the code will be cleared.
E6	Communication malfunction(between outdoor and indoor mainboard)	● The communication line of the unit is not connected. ● The communication line is not through. ● The communication line of the unit is not connected correctly. ● The two ends of communication line are not mounted with magnetic ring. ● The outdoor unit is not electrically powered	It will be cleared once communication recovers or it will be shown all the time.
E6	Communication malfunction(between outdoor mainboard and wired controller)	● The communication line of the unit is not connected. ● The communication line is not through. ● The communication line of the unit is not connected correctly. ● The two ends of communication line are not mounted with magnetic ring. ● The outdoor unit is not electrically powered	It will be cleared once communication recovers or it will be shown all the time
FC	High pressure sensor error	● The sensor is damaged. ● The wire of the sensor is loose. ● The position of the sensor is wrong	It will be automatically cleared after the failure is removed.
F9	Heat exchanger-leaving water temperature sensor error	● The plug on temperature sensor is not correctly connected to the socket on mainboard. ● The resistance of temperature sensor is not correct.	It will be automatically cleared after the failure is removed.
dH	Heat exchanger-leaving water temperature sensor error	● The plug on temperature sensor is not correctly connected to the socket on mainboard. ● The resistance of temperature sensor is not correct.	It will be automatically cleared after the failure is removed.
F1	Refrigerant liquid line temperature sensor error	● The plug on temperature sensor is not correctly connected to the socket on mainboard. ● The resistance of temperature sensor is not correct.	It will be automatically cleared after the failure is removed.
F8	Heat exchanger-entering water temperature sensor error	● The plug on temperature sensor is not correctly connected to the socket on mainboard. ● The resistance of temperature sensor is not correct.	It will be automatically cleared after the failure is removed.
FE	Water tank water temperature sensor 1 error	● The plug on temperature sensor is not correctly connected to the socket on mainboard. ● The resistance of temperature sensor is not correct.	It will be automatically cleared after the failure is removed.
FL	Water tank water temperature sensor 2 error	● The plug on temperature sensor is not correctly connected to the socket on mainboard. ● The resistance of temperature sensor is not correct.	It will be automatically cleared after the failure is removed.

F3	Refrigerant gas line temperature sensor error	● The plug on temperature sensor is not correctly connected to the socket on mainboard. ● The resistance of temperature sensor is not correct.	It will be automatically cleared after the failure is removed.
dF	other thermal outlet temperature sensor error	● The plug on temperature sensor is not correctly connected to the socket on mainboard. ● The resistance of temperature sensor is not correct.	It will be automatically cleared after the failure is removed.
F0	Room temperature sensor error	● The plug on temperature sensor is not correctly connected to the socket on mainboard. ● The resistance of temperature sensor is not correct.	It will be automatically cleared after the failure is removed.
EC	Water flow switch protection	● The switch is damaged. ● The wire of the switch is loose. ● The position of the switch is wrong	It will be cleared after the unit is energized again.
E2	Indoor anti-frozen protetion	● The resistance of temperature sensor is not correct. ● The electric expansion valve can not work normally.	It will be cleared once malfunction is removed or it will be shown all the time; but it will be cleared immediately when switching operation mode.
No display	Sanitary water tank High-temp protection	● The resistance of temperature sensor is not correct. ● The plug on temperature sensor is not correctly connected to the socket on mainboard. ● Mainboard of outdoor unit is damaged.	Press ON/OFF key to clear
Ed	outlet temperature High-temp protection (This error code will not displayed on wired controller but only on mainboard of outdoor unit)	● The resistance of temperature sensor is not correct. ● The plug on temperature sensor is not correctly connected to the socket on mainboard. ● Mainboard of outdoor unit is damaged.	If the malfunction is removed, the code will be automatically cleared.
No display	solar outlet High-temp protection	● The resistance of temperature sensor is not correct. ● The plug on temperature sensor is not correctly connected to the socket on mainboard. ● Mainboard of outdoor unit is damaged.	Press ON/OFF key to clear
EH	Welding protection of the auxiliary heater 1	● The AC contactor is damaged.	De-energize the unit and then, energize it again. If the malfunction is removed, the code will be cleared.
EH	Welding protection of the auxiliary heater 2	● The AC contactor is damaged.	De-energize the unit and then, energize it again. If the malfunction is removed, the code will be cleared.
EH	Welding protection of the water tank heater	● The AC contactor is damaged.	De-energize the unit and then, energize it again. If the malfunction is removed, the code will be cleared.
dU	Pull-out of the gate-controller	● the gate-controller is pull out	It will be cleared after the gate-controller is rewire

2) Drive Failure Code

● The Same Malfunctions for Single-phase Unit and Three-phase Unit

Item		Display on Nixie Tube of Outdoor Unit	Display on Wired Controller	Remarks
Inverter Drive Failure	Over-voltage DC bus	PH	DC over-vol.	
	Radiator or IPM or PFC module overtemperature	P8	Overtemp.-mod.	
	Sensing circuit error or current sensor error	PC	Current sen.	
	Radiator or IPM or PFC module temperature sensor error	P7	T-mod. sensor	
	Compressor over-current	P5	Com. over-curr.	
	Under-voltage DC bus or voltage drop error	PL	DC under-vol.	
	Start failure	LC	Start failure	
	Drive module resetting	P0	Driver reset	
	desynchronizing	H7	Desynchronize	
	Phase loss	LD	Phase loss	
	Communication error	P6	drive-main com.	
	IPM defective	H5	IPM defective	
	Compressor internal overload protection	H3	Comp. overload	
	AC current protection (input side)	PA	AC curr. pro.	
	Incorrect AC voltage input	PP	AC voltage	
	FPC defective	HC	FPC defective	

● The Malfunctions only for Single-phase Unit

Item		Display on Nixie Tube of Outdoor Unit	Display on Wired Controller	Remarks
Inverter Drive Failure	Charging circuit error	PU	Charge circuit	

2 FLOW CHART OF TROUBLESHOOTING

(1) Comp High-pressure Protection E1

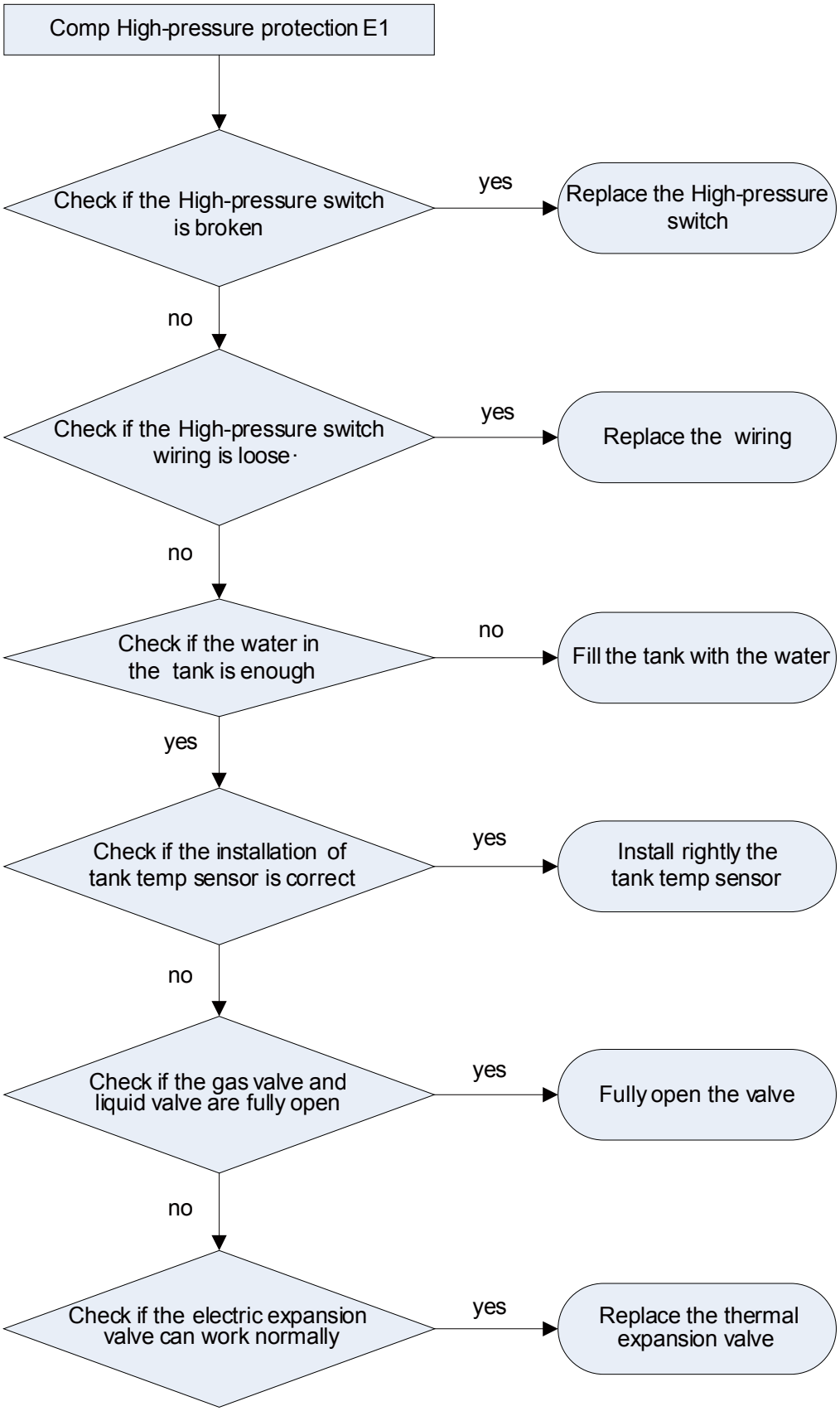

(2) Comp Low- pressure Protection E3

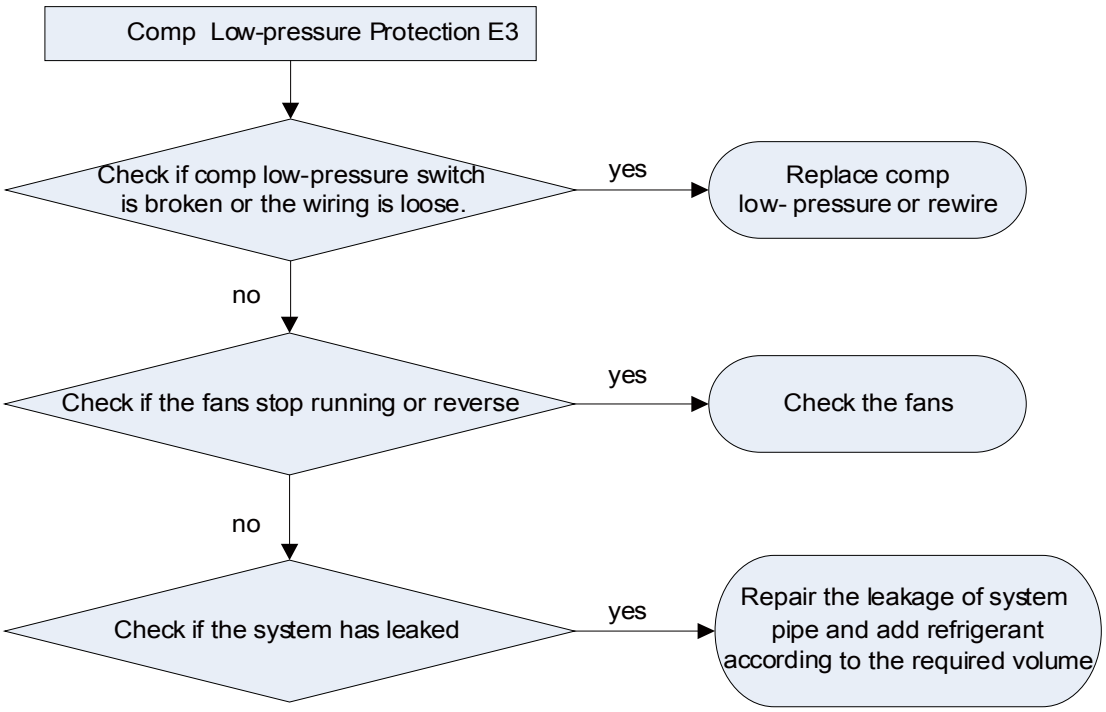

(3) Comp Discharge Temp Protection E4

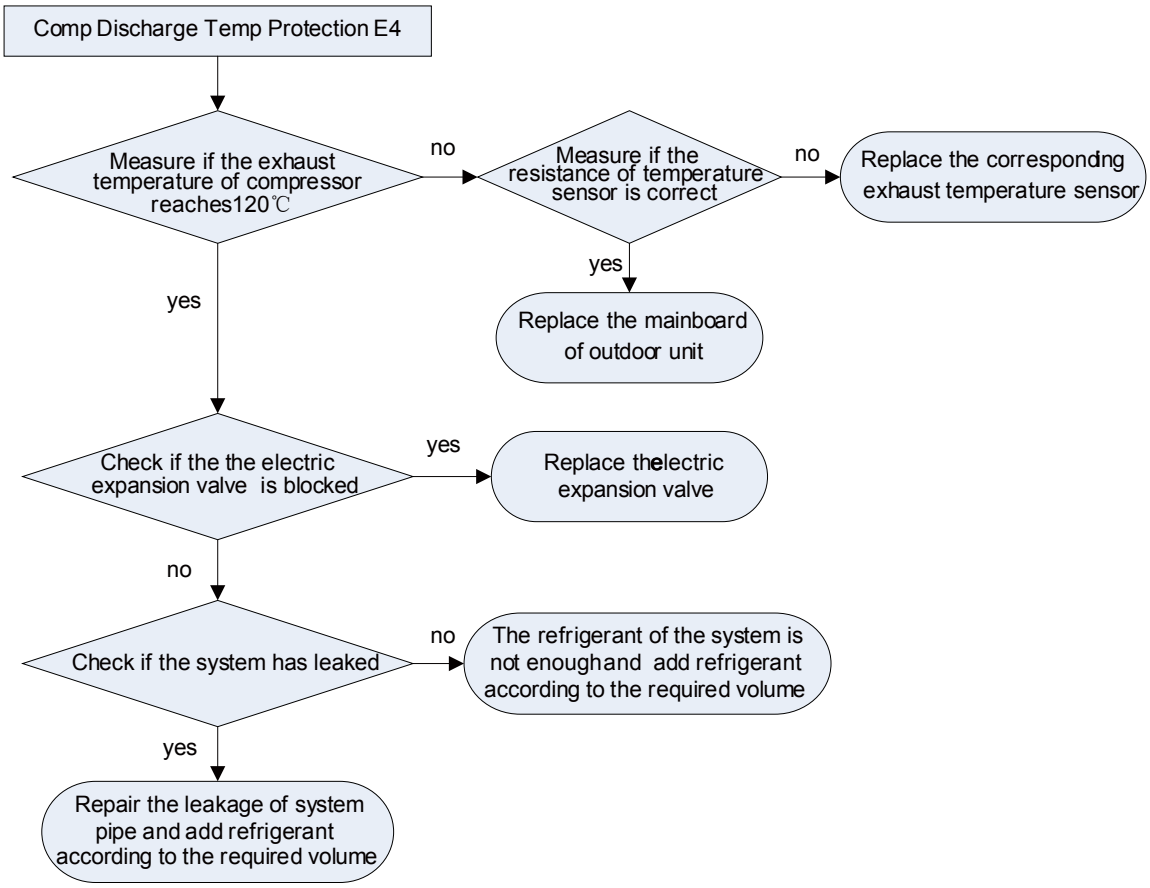

(4) Overload proection of compressor or driver error

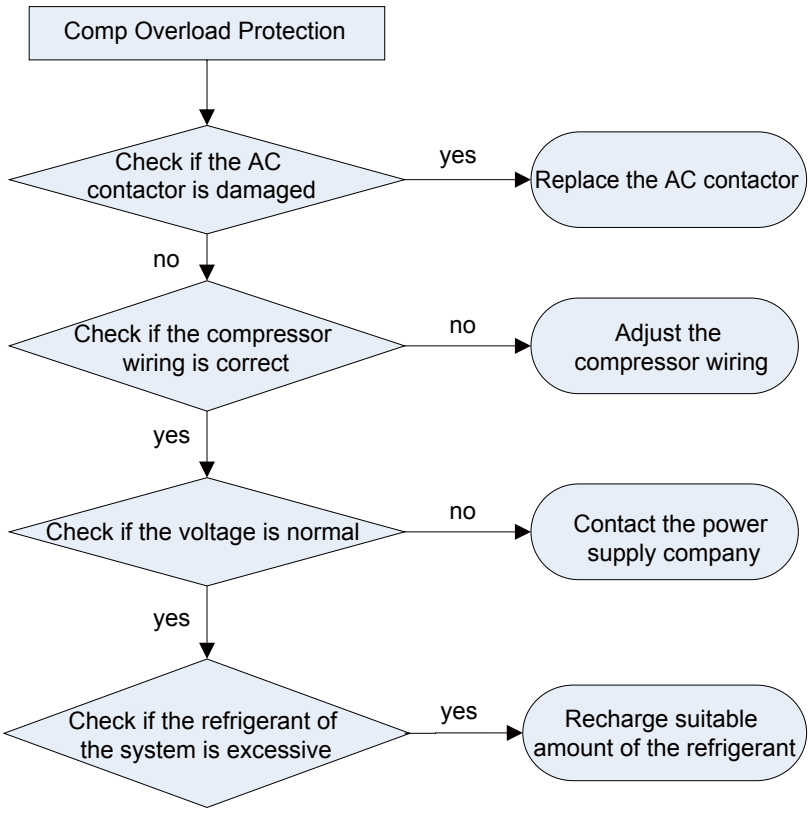

(5) DC fan error EF

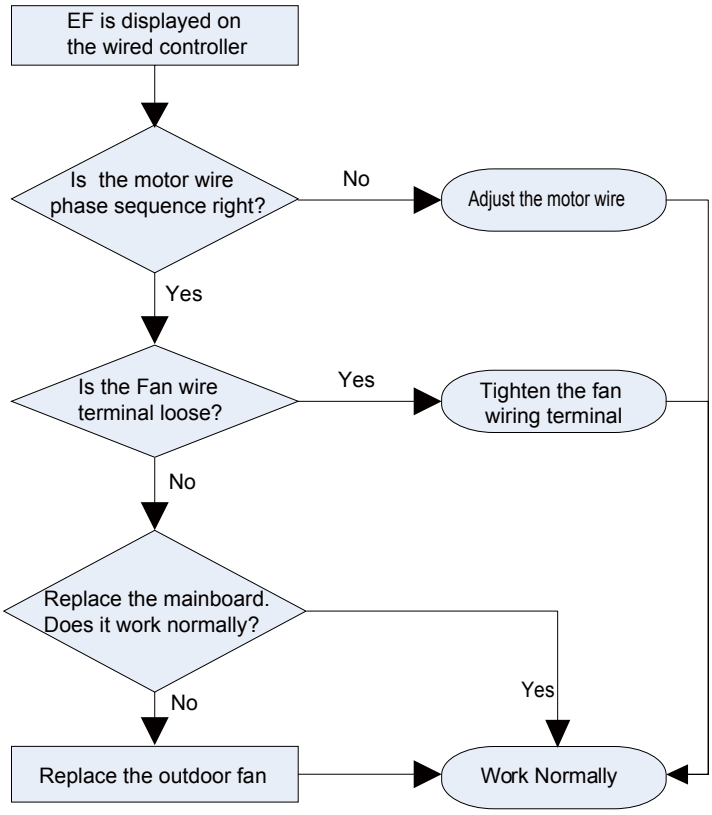

(6) Temperature sensor error

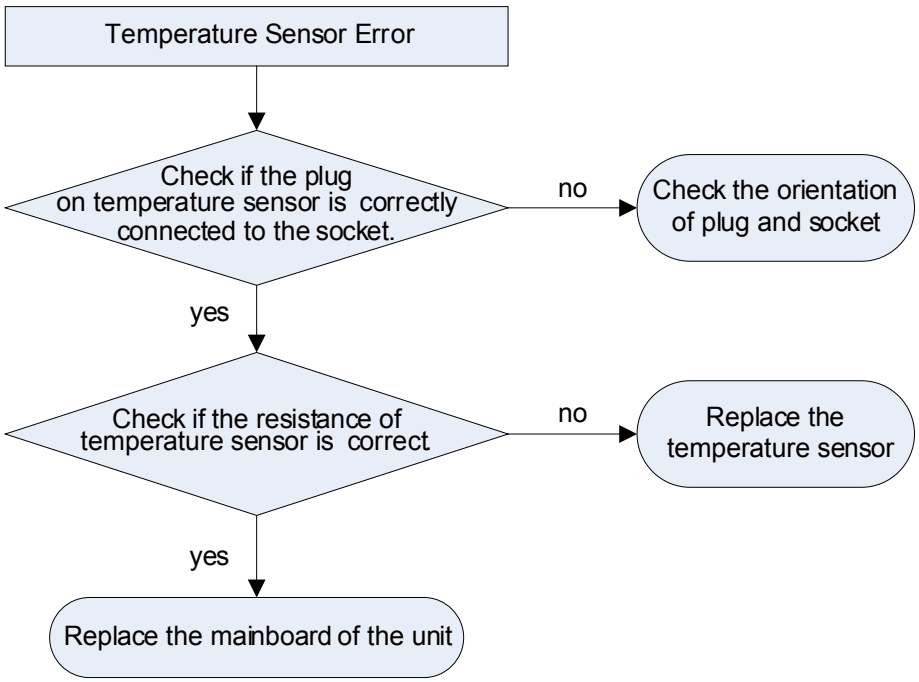

(7) Communication Malfunction E6

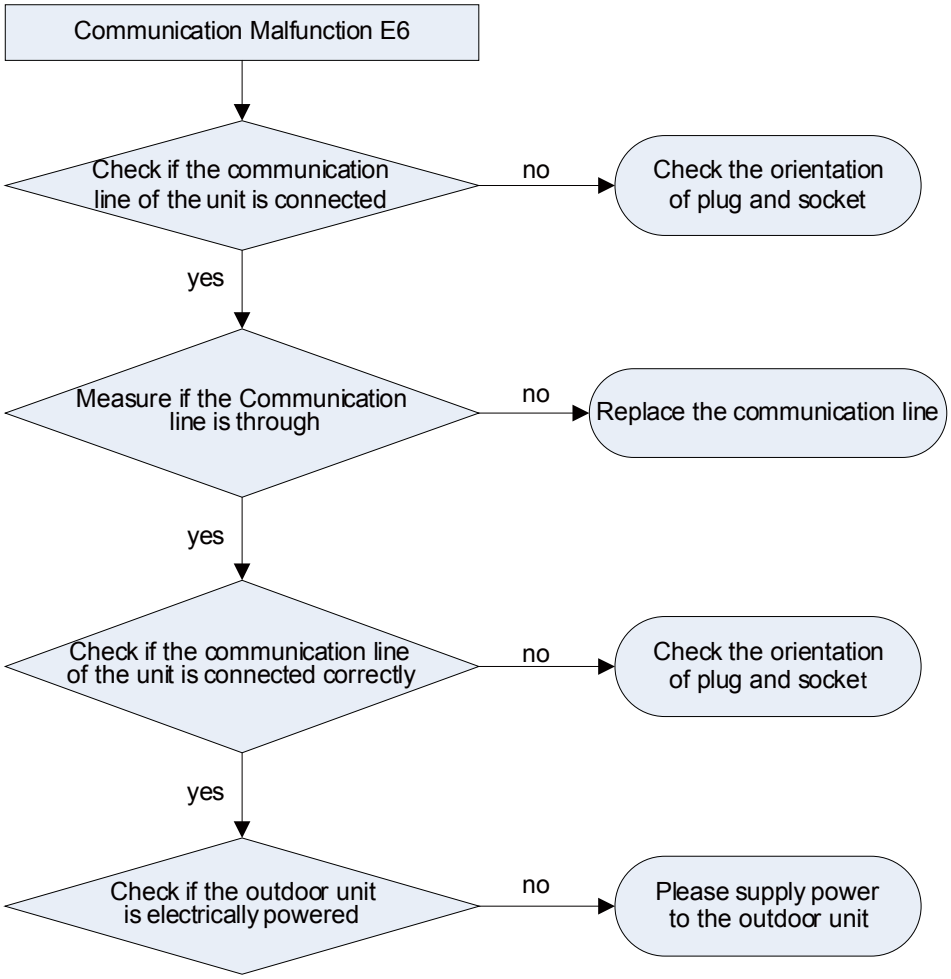

(8) Indoor capacity switch error(code:"C5")

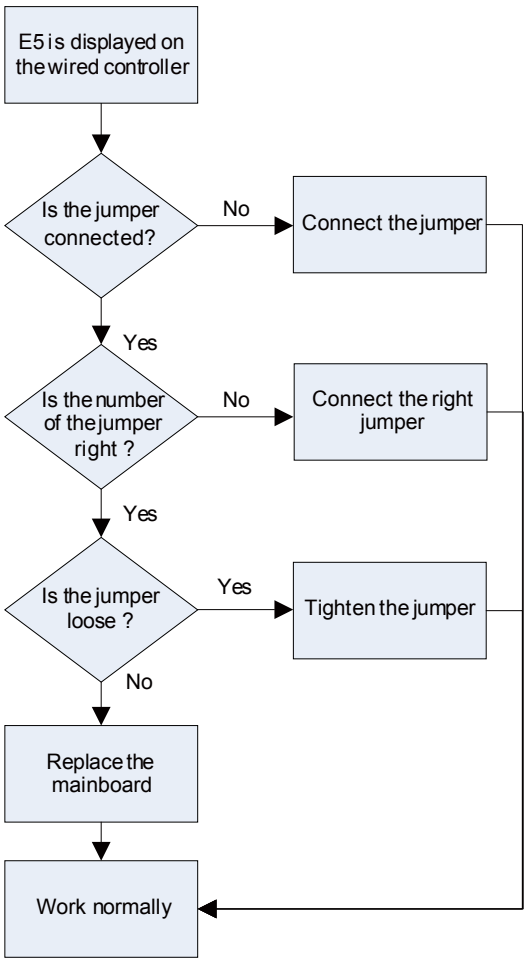

3 DIAGNOSIS OF DRIVING

3.1 Diagnosis Flowchart of Driving of Single-phase Unit and Three-phase Unit

3.1.1 Drive module reset(code:"P0") ; IPM or PFC temperature sensor error(code:"P7") ; AC current protection (input side)(code:"PA"); Current sense circuit error(code:"PC"); PFC protection(code:"HC")

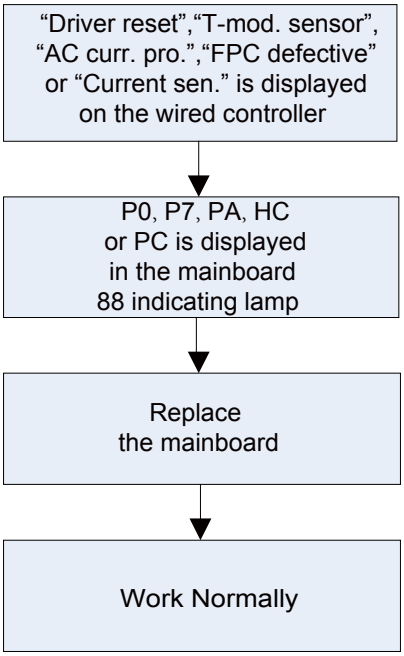

3.1.2 IPM or PFC over-temperature protection(code:"P8")

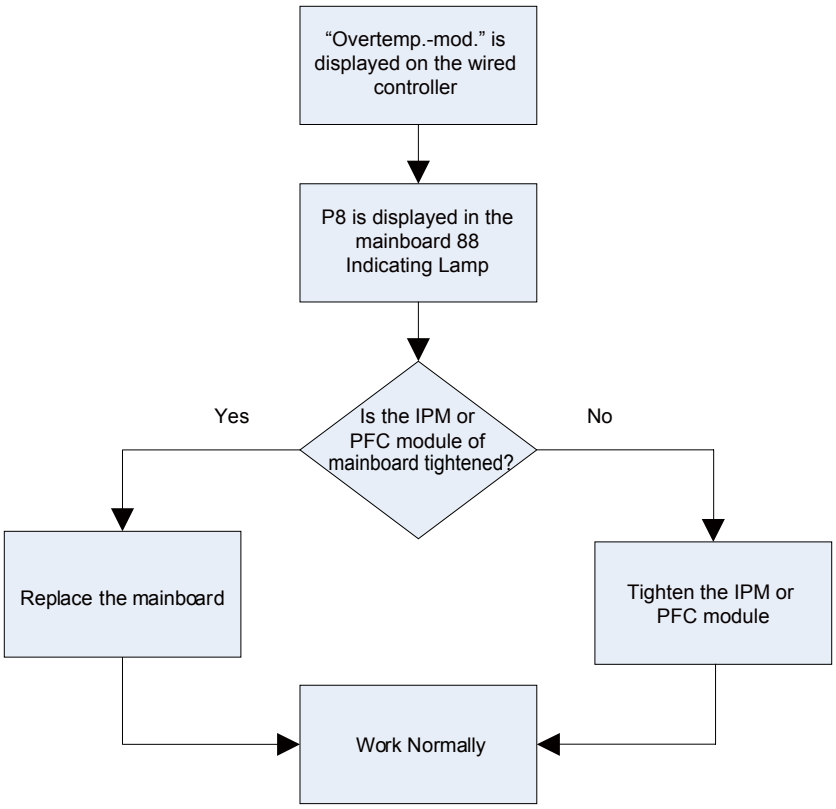

3.1.3 DC busbar over-voltage protection(code:"PH") ; DC busbar under-voltage protection(code:"PL")

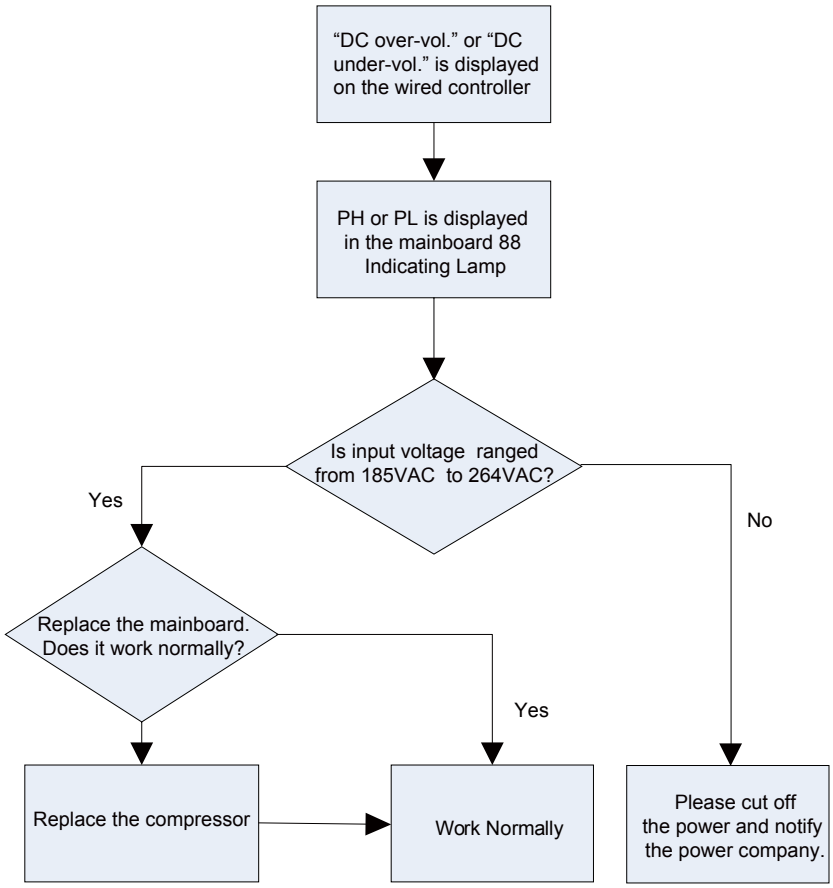

Notice: three-phase input voltage is in the range from 320VAC to 475VAC.

3.1.4 Drive-to-main-control communication error(code:"P6")

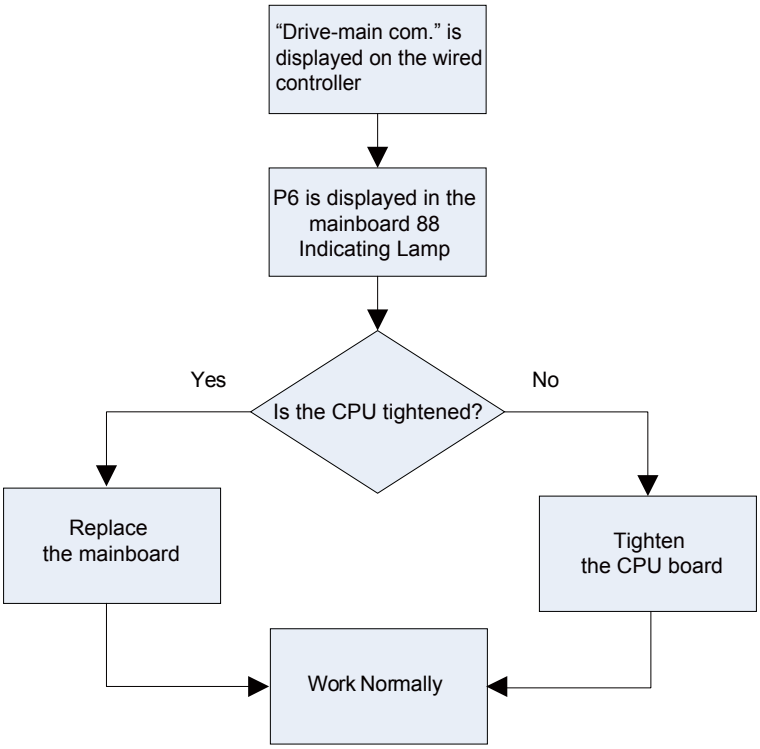

3.1.5 Compressor startup failure(code:"LC")

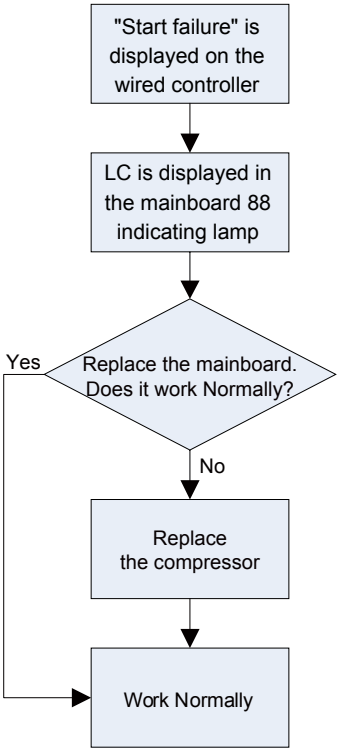

3.1.6 Compressor current protection(code:"P5") ; Compressor motor desynchronizing(code:"H7") ; IPM protection(code:"H5"); Phase loss(code:"LD")

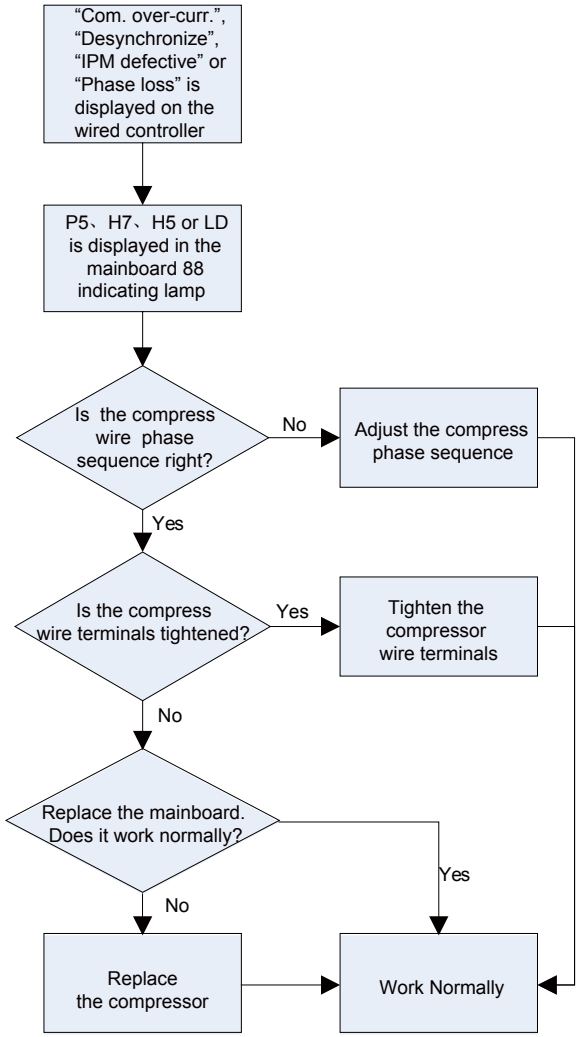

3.1.7 Charging circuit error(code:"PU")

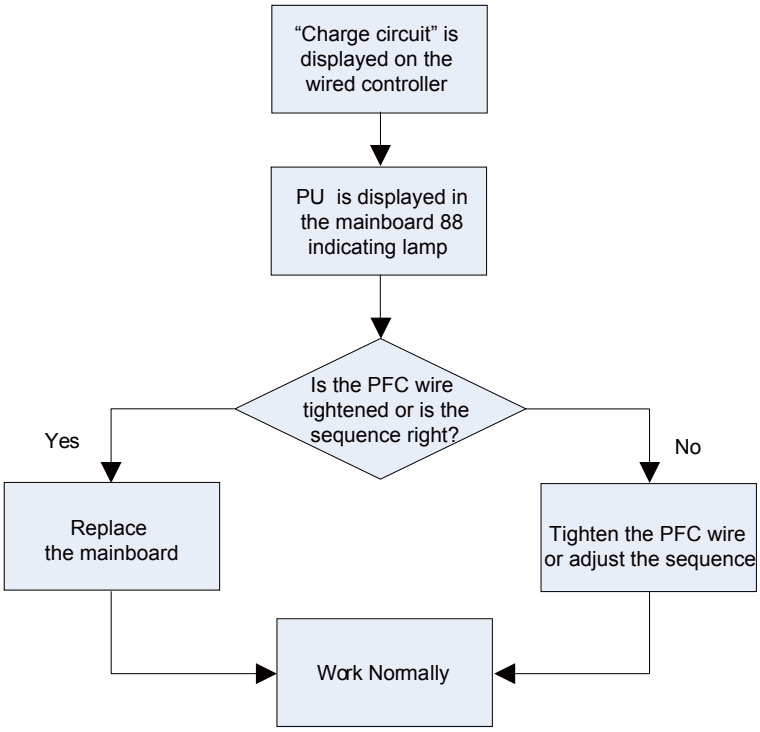

4 DISASSEMBLY AND ASSEMBLY PROCEDURE OF MAIN PARTS

Disassembly and assembly of external casing	
Remark: Please first cut off the power and discharge the Freon out of the unit	
Operation Procedure	Illustration
OutdooUnit: CH-HP6.0SINK(O),CH-HP8.0SINK(O),CH-HP10SINK(O)	
1) **Remove the cover.front side plate l and right side plate.** ● Loosen the tapping screws, and remove the cover, the front side plate and right side plate.[**Fig. 2**]	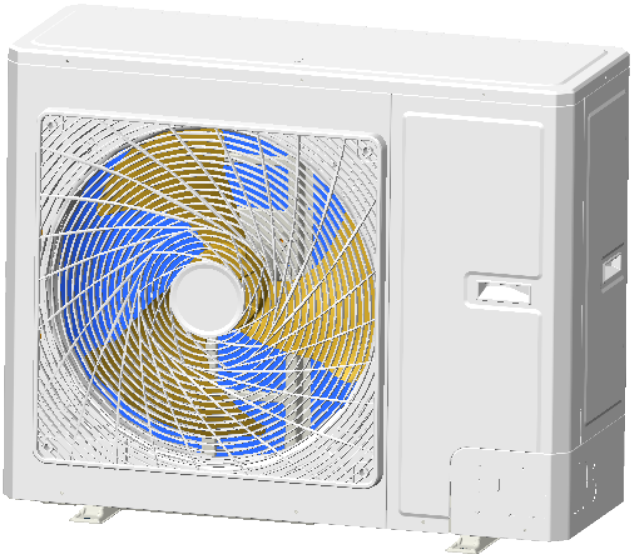 Fig. 1 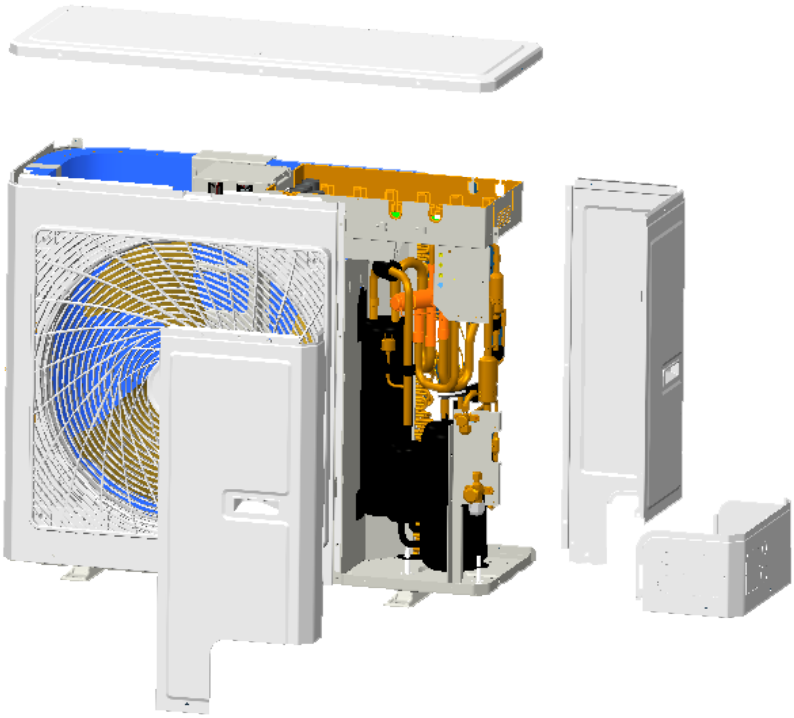 Fig. 2

2) **Remove the Cabinet.**

- Loosen the tapping screws, and remove the Cabinet. [**See Fig. 3**]

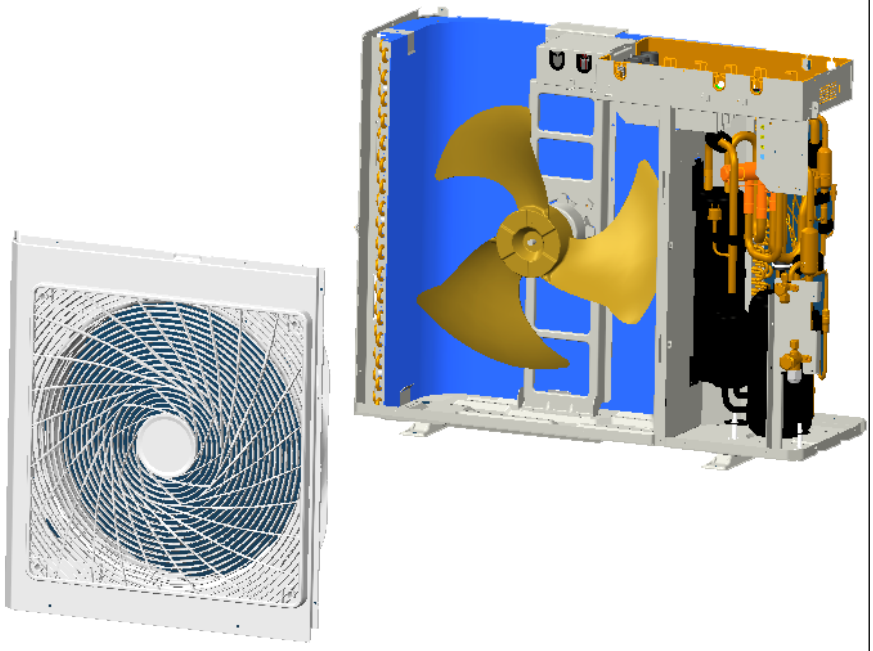

Fig. 3

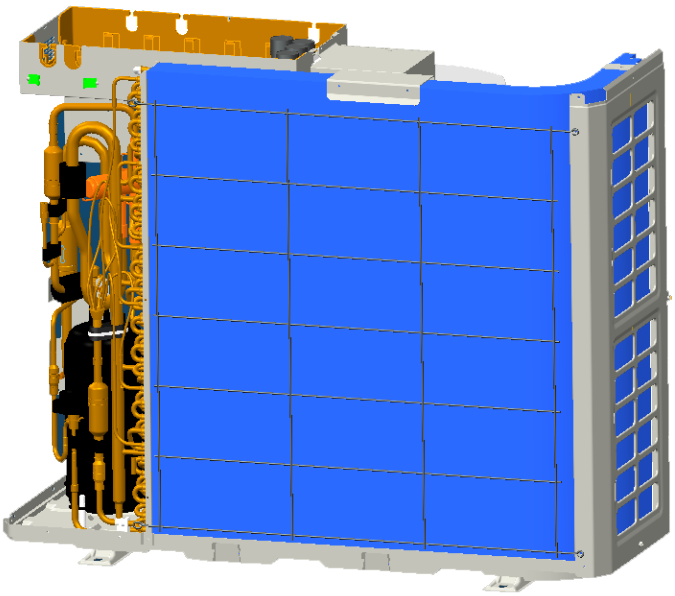

Fig. 4

3) **Remove right side plate.**
● Loosen the two tapping screws, and remove right side plate. [**See Fig.5**]

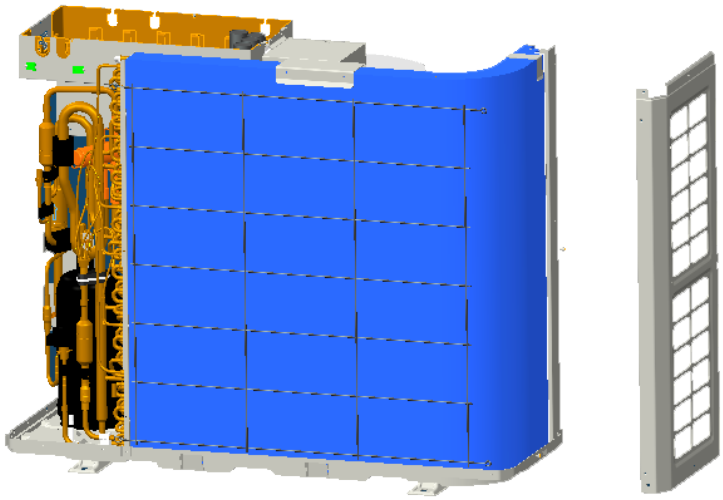

Fig. 5

4) **Remove the Rear Grill**
● Loosen the two tapping screws, and remove the Rear Grill.[**See Fig.6**]

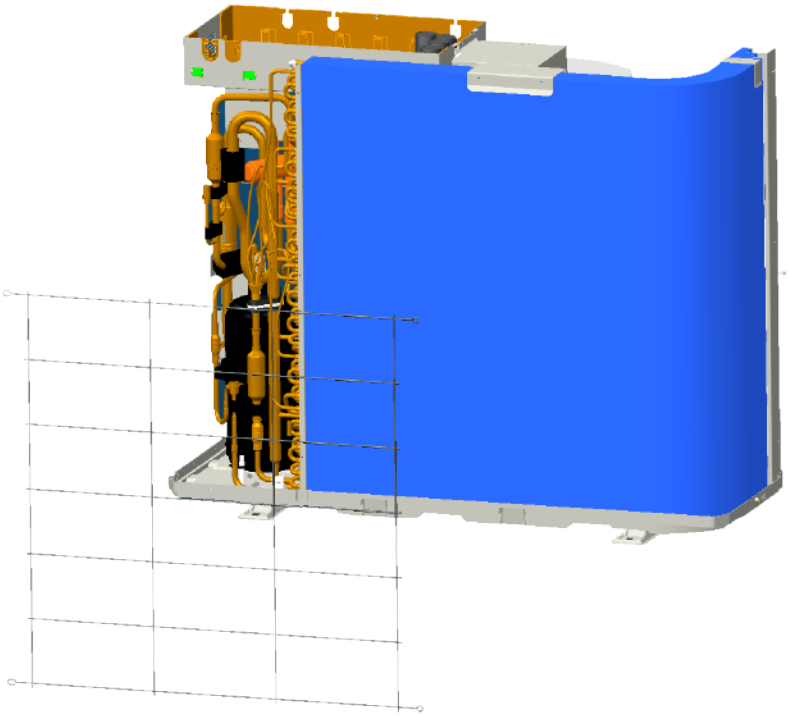

Fig.6

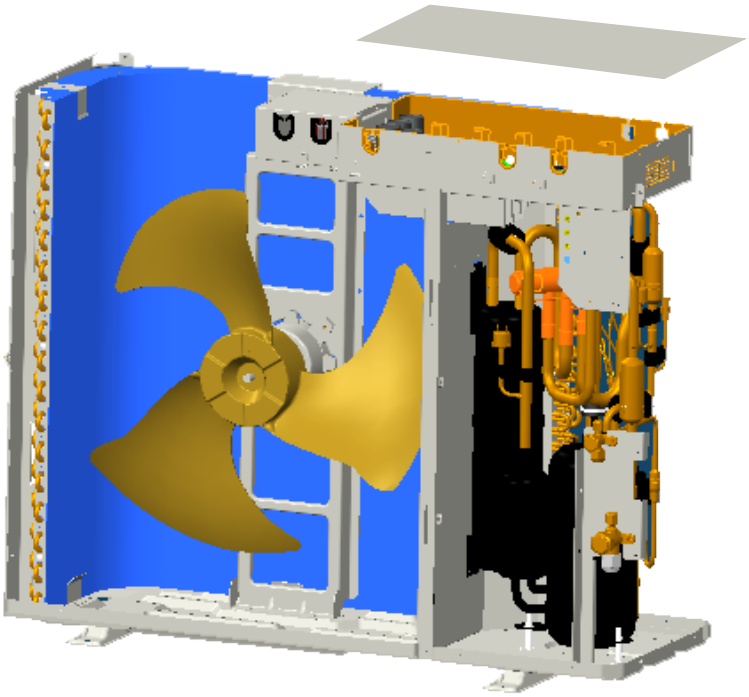

Fig.7

5) **Remove the Electric Box Assy**

● Loosen the two tapping screws, and remove the Electric Box Assy .[**See Fig. 8**]

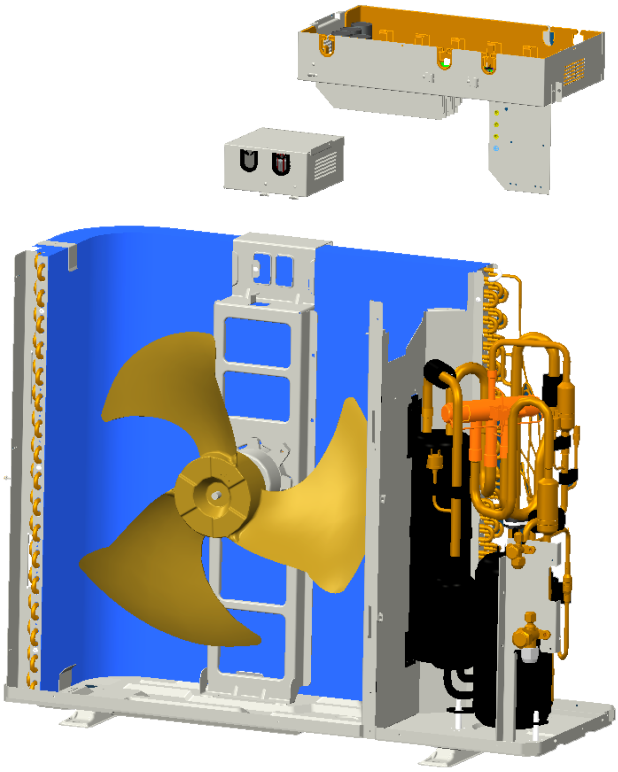

Fig.8

6) **Remove the axial fan**

● Loosen the ball nuts , and remove the axial fan. [**See Fig. 9**]

Fig. 9

7) **Remove the motor**

● Loosen the screws fixing the motor support. Remove the motor support.

● Loosen the wire of motor, and pull it through the hole. Remove the motor. [**See Fig. 10**]

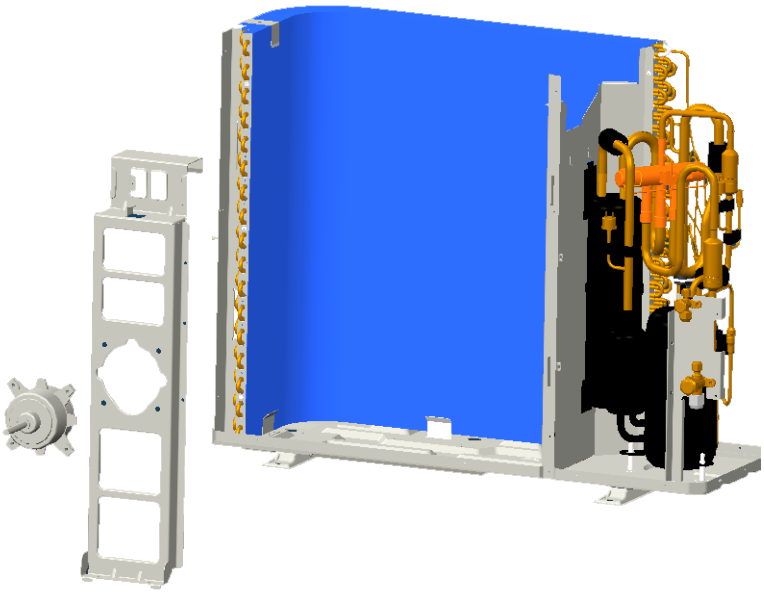

Fig.10

8) **Remove the 4-way valve**

- Loosen the screws fixing the coil of 4-way valve.
- Remove the coil of 4-way valve.
- Unsolder the tubes connected to the 4-way valve.
- Remove the 4-way valve. [**See Fig.11**]

Note: When welding, the valve should be covered by wet cloth in order to avoid the high temp. damage.

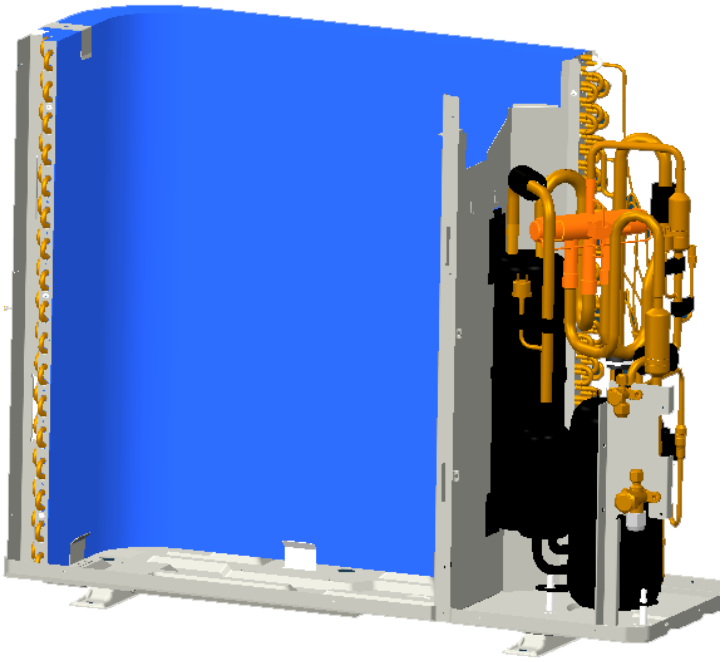

Fig.11

①. Remove gas valve

- Loosen the bolts fixing the gas valve.
- Welding out the pipe connected to the gas valve [**See Fig.12**]

Note: When welding, the valve should be covered by wet cloth in order to avoid the high temp damage.

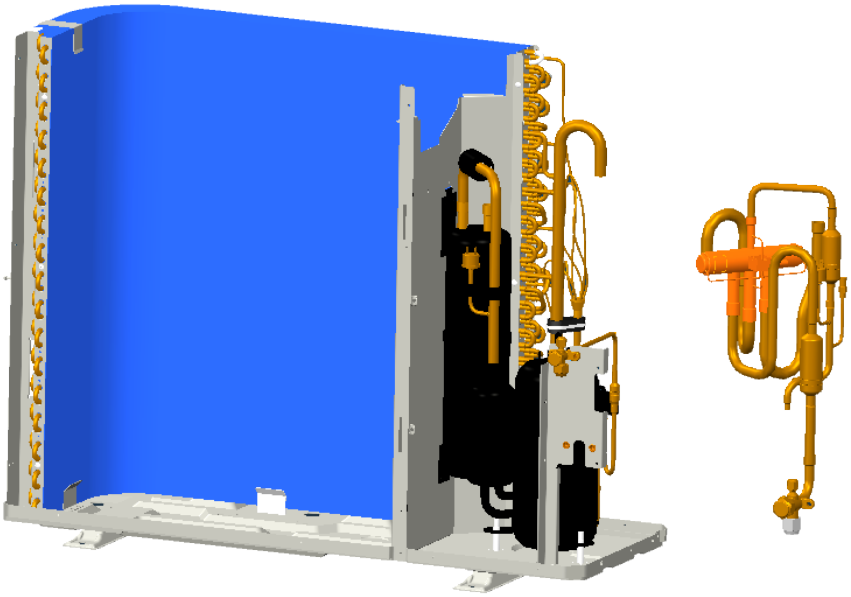

Fig.12

②. Remove liquid valve ● Loosen the bolts fixing the liquid valve. ● Unsolder the pipe connected to the liquid valve [**See Fig.13**] **Note**: When welding, the valve should be covered by wet cloth in order to avoid the high temp damage.	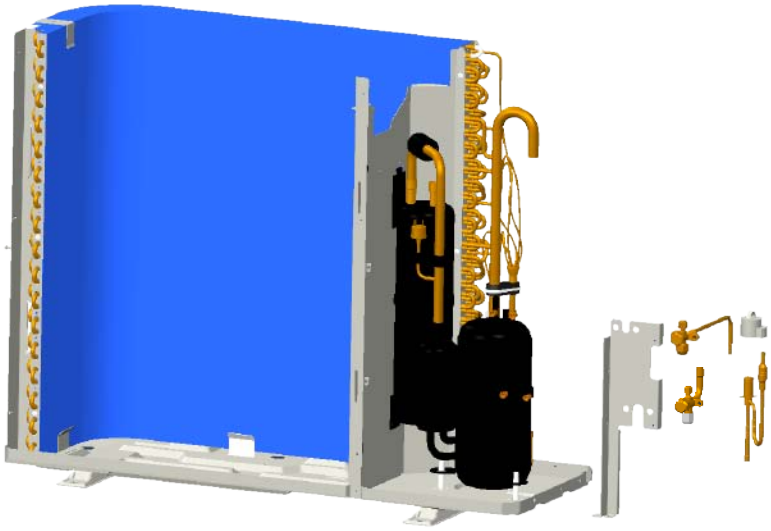 Fig.13
9) **Remove compressor and gas-liquid separator** ● Remove the connection wire of compressor ● Unsolder the suction pipe and discharge pipe. ● Loosen the bolts fixing the compressor and remove the compressor and gas-liquid separator. [**See Fig.13**]	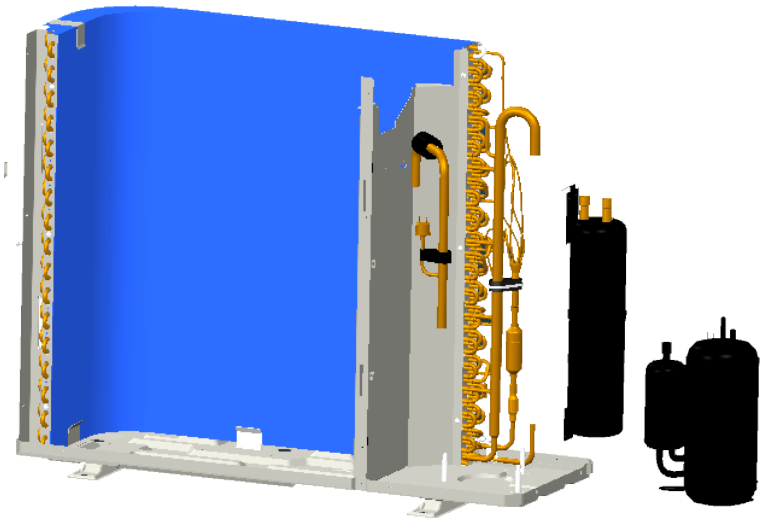 Fig.14

Disassembly and assembly of external casing	
Remark: Please first cut off the power and discharge the Freon out of the unit	
Operation Procedure	**Illustration**
OutdooUnit : CH-HP12SINK(O), CH-HP14SINK(O), CH-HP16SINK(O),CH-HP12SINM(O), CH-HP14SINM(O), CH-HP16SINM(O)	
1) **Remove the cover,front side plate and right side plate.** ● Loosen the two tapping screws, and remove the cover, the front side plate and right side plate.[**Fig. 2**]	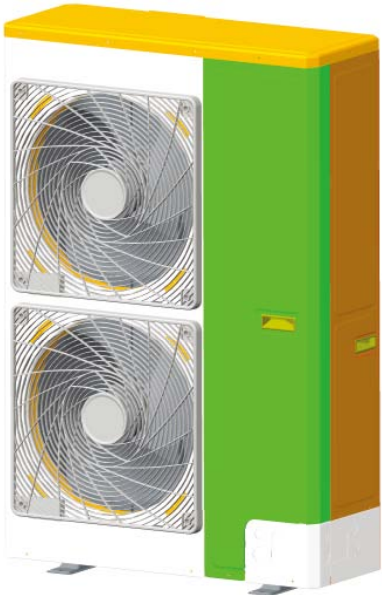 Fig. 1 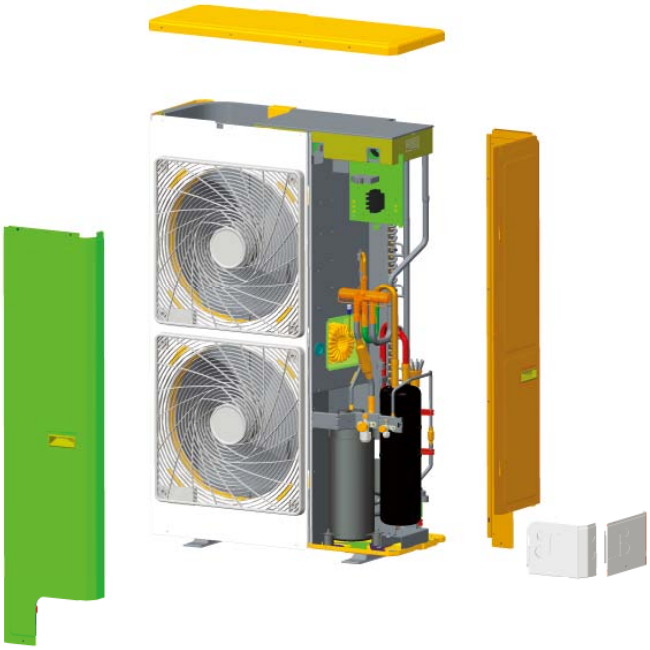 Fig. 2

2) **Remove the Cabinet**.

● Loosen the two tapping screws, and remove the Cabinet. [**See Fig. 3**]

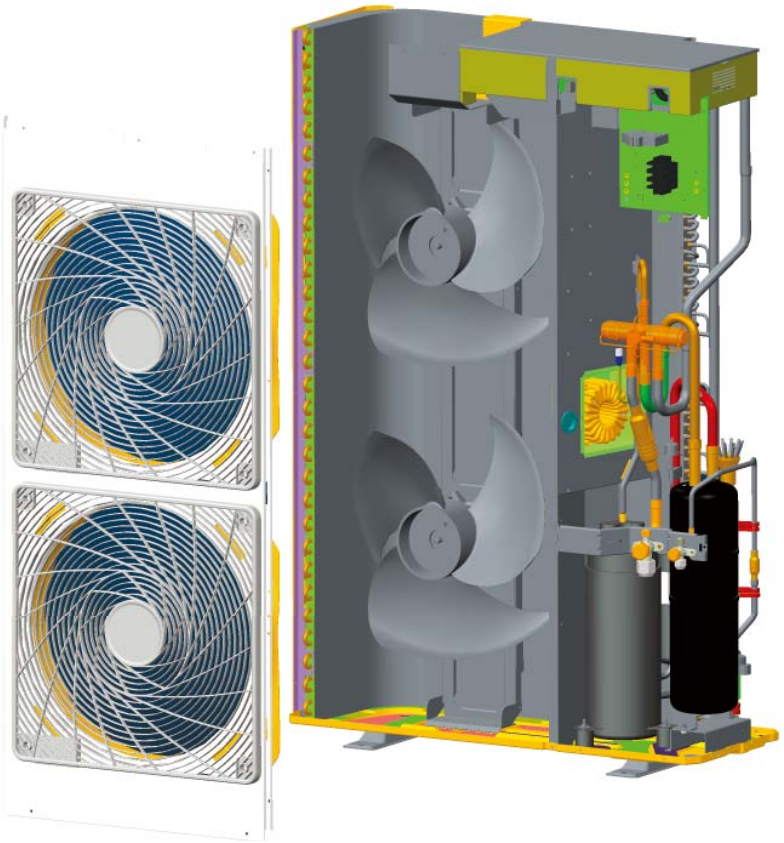

Fig. 3

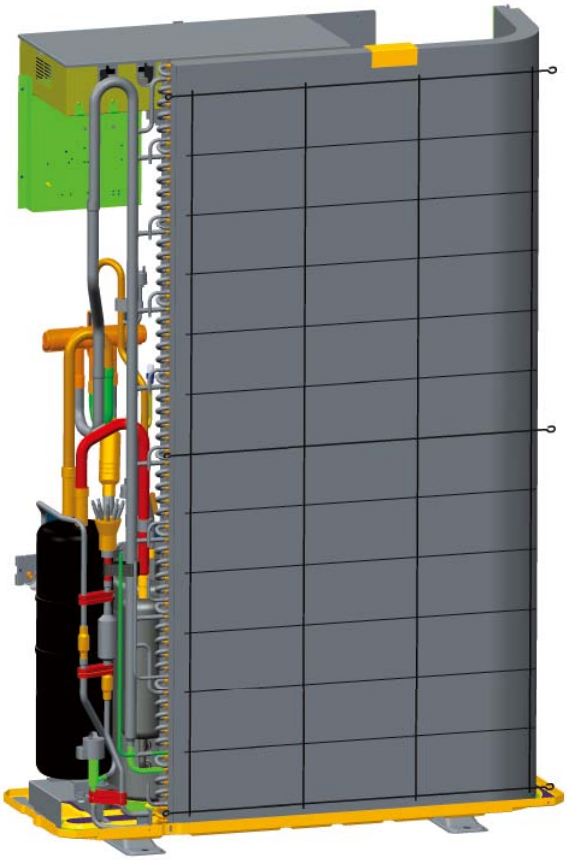

Fig. 4

3) Remove the Rear Grill · Loosen the two tapping screws, and remove the Rear Grill.[See Fig.5]	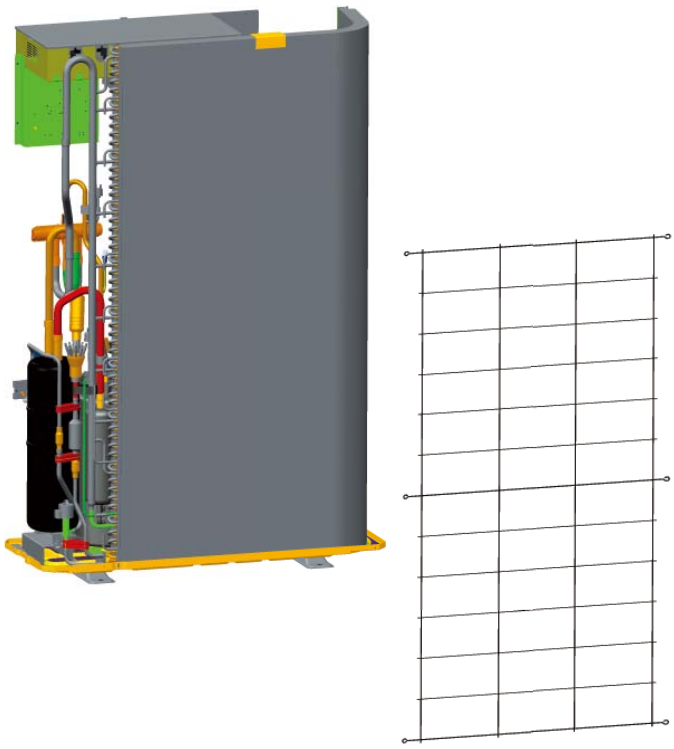 Fig.5
4) **Remove the Electric Box Assy** ● Loosen the two tapping screws, and remove the electric box assy .[**See Fig. 8**]	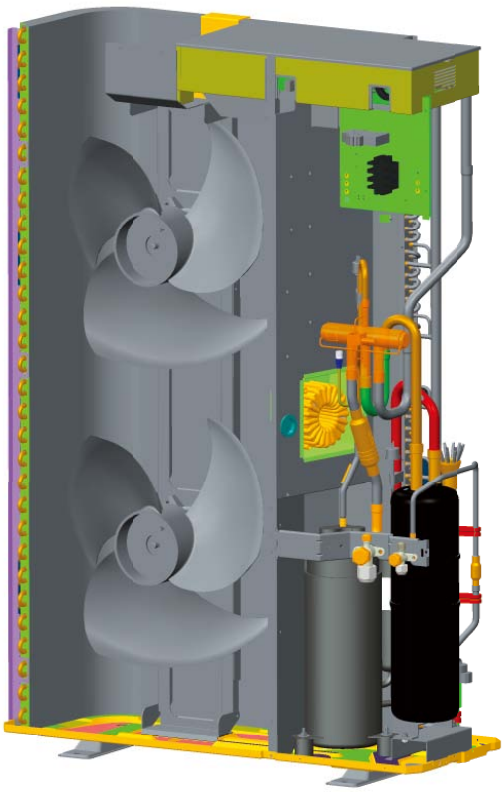 Fig.7

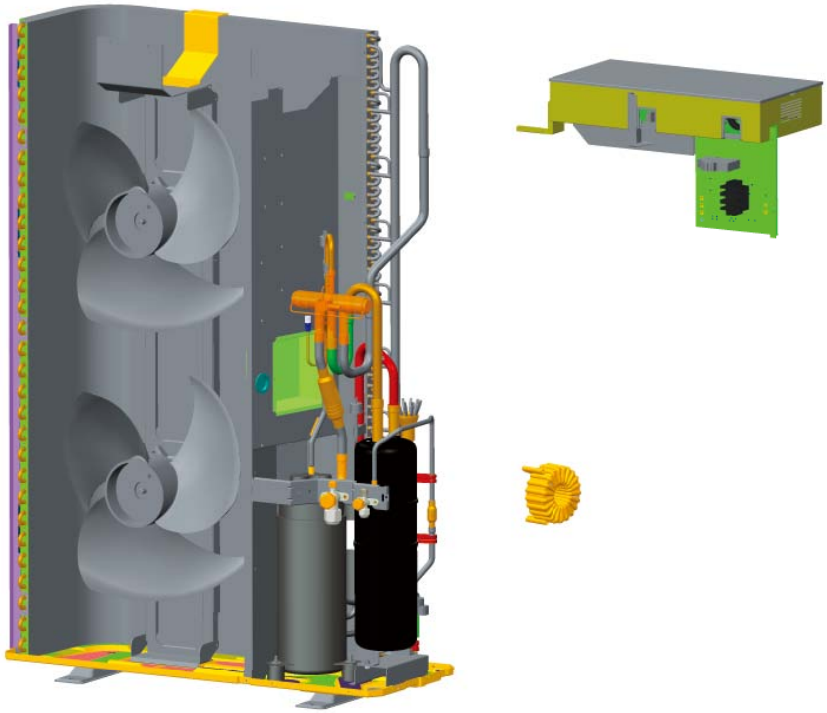

Fig.8

6) **Remove the axial fan**

● Loosen the ball nuts , and remove the axial fan. [**See Fig. 9**]

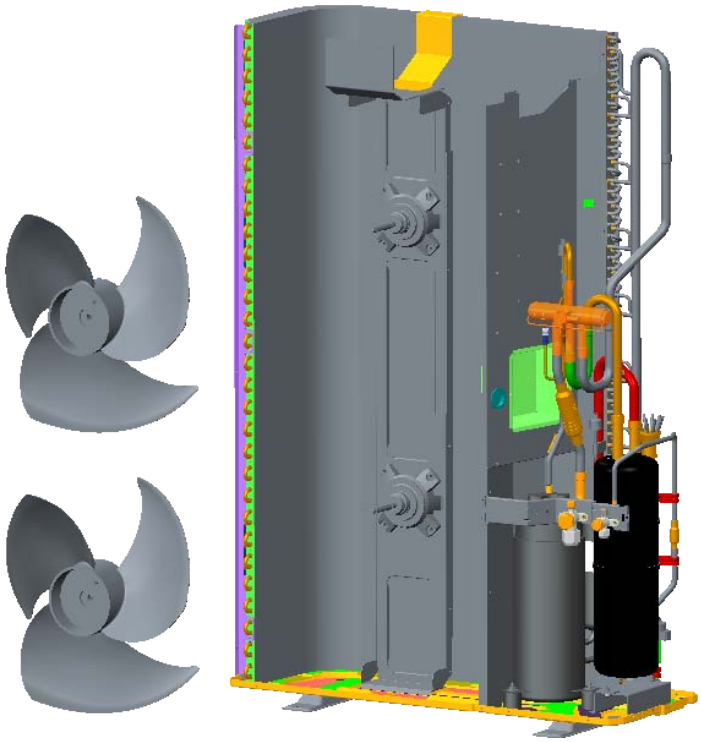

Fig. 9

7) **Remove the motor**

● Loosen the screws fixing the motor support.

● Remove the motor support. Loosen the wire of motor, and pull it through the hole. Remove the motor. [**See Fig. 10**]

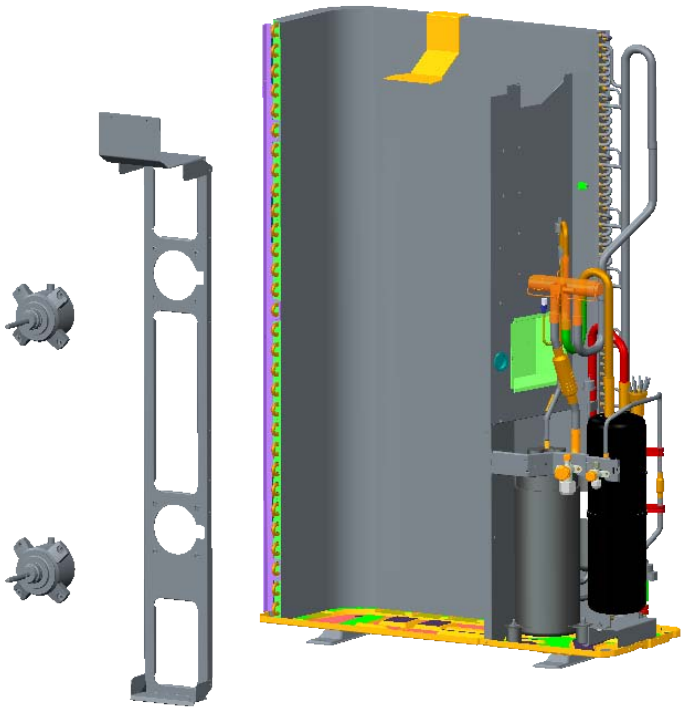

Fig.10

8) **Remove the 4-way valve**

● Loosen the screws fixing the coil of 4-way valve.

● Remove the coil of 4-way valve.

● Unsolder the tubes connected to the 4-way valve.

● Remove the 4-way valve.[See Fig.11]

Note: When welding, the valve should be covered by wet cloth in order to avoid the high temp. damage.

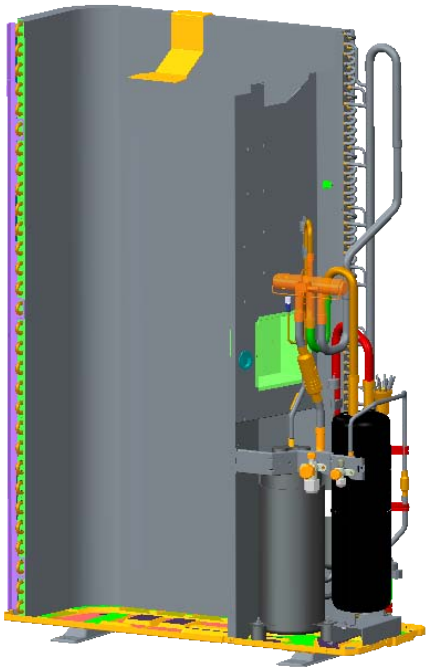

Fig.11

①. **Remove gas valve**

- Loosen the bolts fixing the gas valve.
- Welding out the pipe connected to the gas valve [**See Fig.12**]

Note: When welding, the valve should be covered by wet cloth in order to avoid the high temp hurt.

②.**Remove liquid valve**

- Loosen the bolts fixing the liquid valve.
- Welding out the pipe connected to the liquid valve [**See Fig.12**]

Note: When welding, the valve should be covered by wet cloth in order to avoid the high temp hurt.

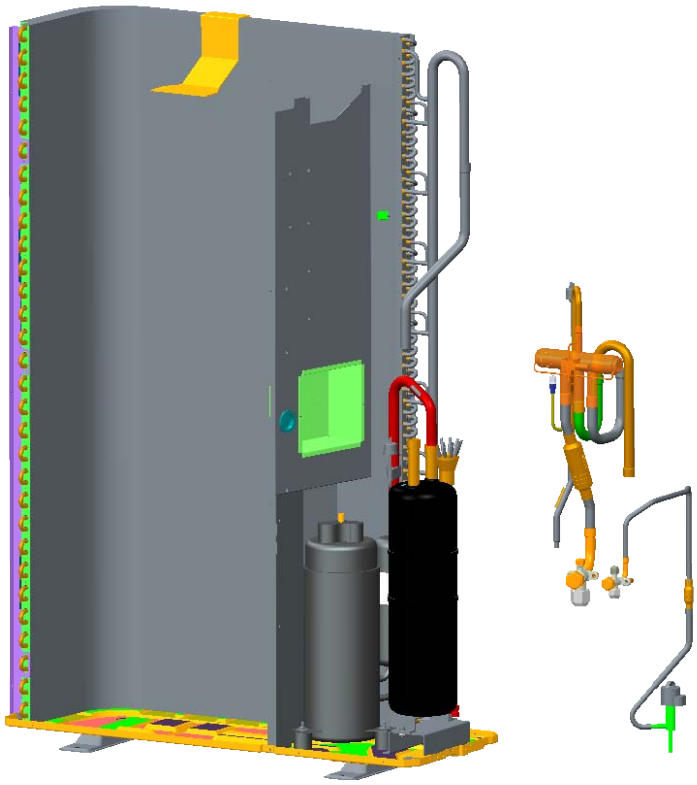

Fig.12

9) **Remove compressor and gas-liquid separator**

- Remove the connection wire of compressor.[**See Fig.13**]
- Welding out the suction pipe and discharge pipe.[**See Fig.14**]
- Loosen the bolts fixing the compressor and Remove the compressor and gas-liquid separator.

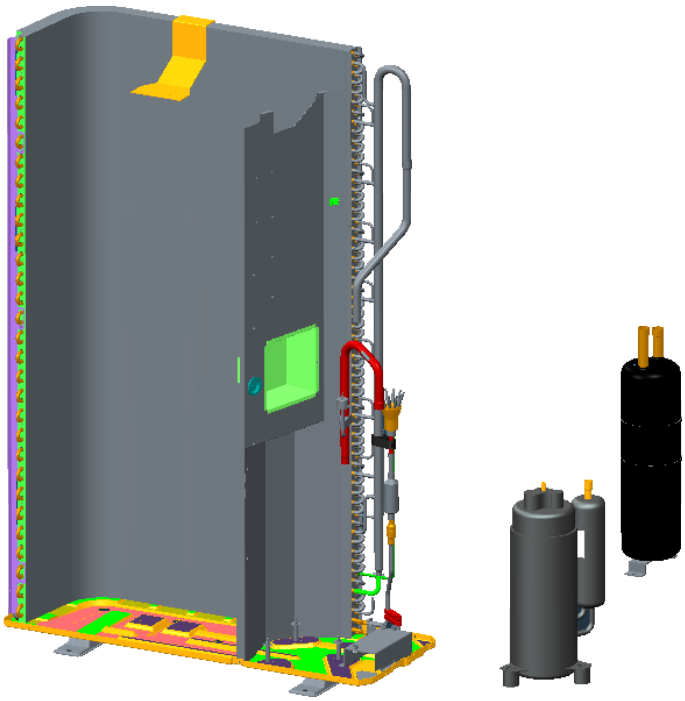

Fig.13

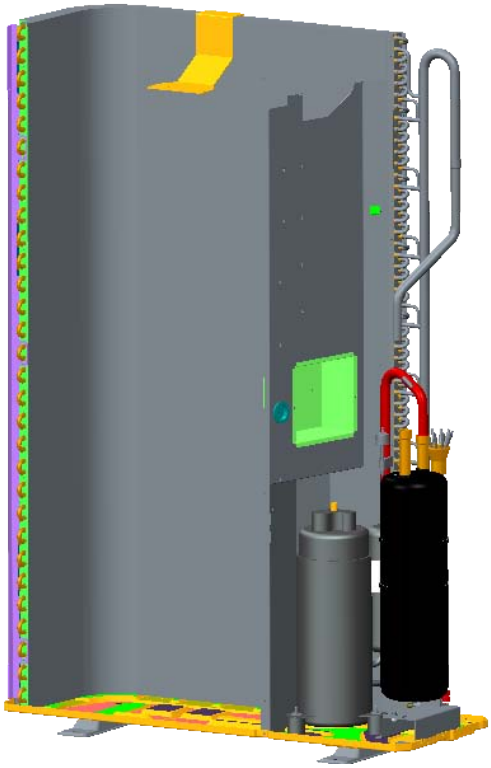

Fig.14

Indoor Unit	
1) **Front panel assy** [**Fig. 2**]	 Fig. 1 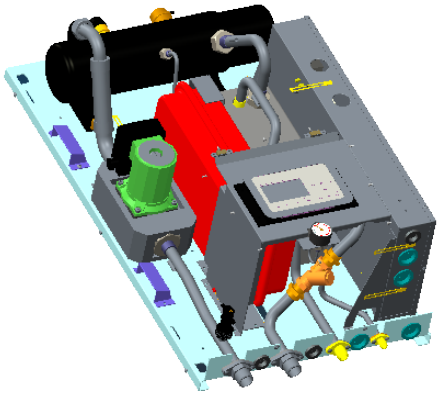 Fig. 2

2) **Electric box assy** [**Fig. 3**]	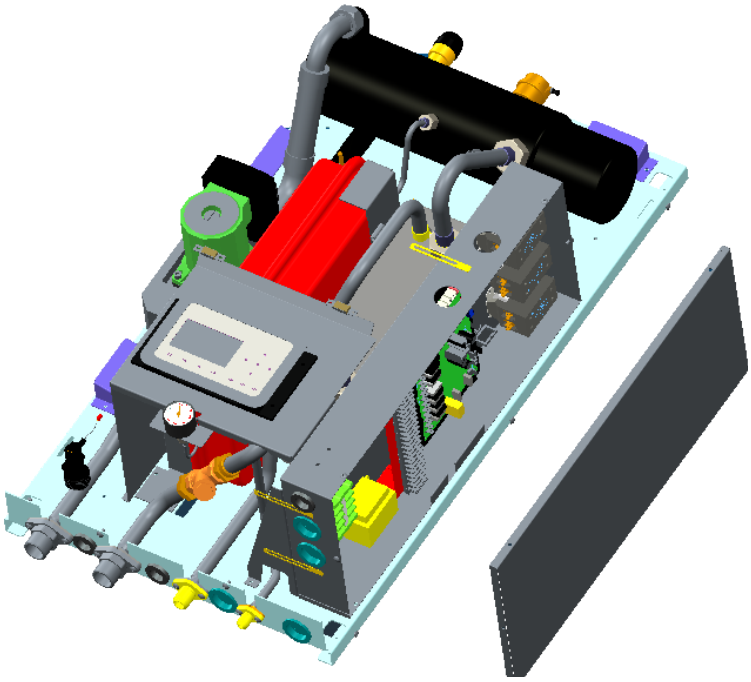 Fig. 3
3) **Water pump and water flow switch** [**See Fig.4**]	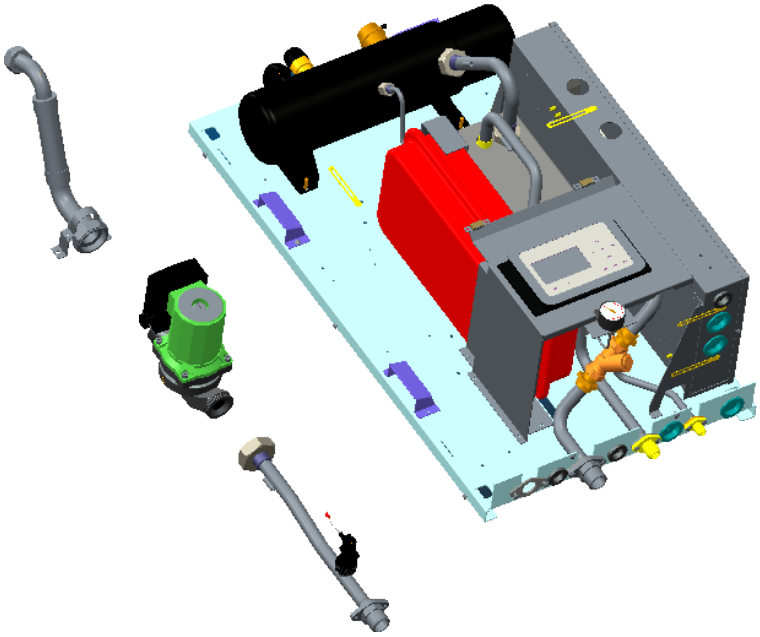 Fig. 4

4) **Electric heater, automatic air outlet valve and relieve valve [See Fig.5] (joint of pressure gauge for capillary shall be removed)**	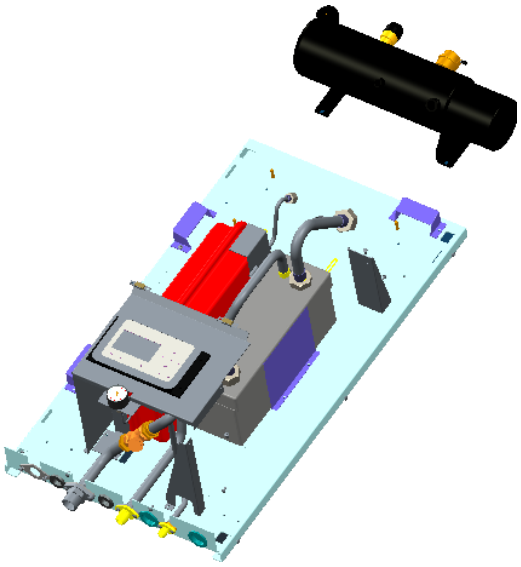 Fig.5
5) **Expansion tank [See Fig. 6]**	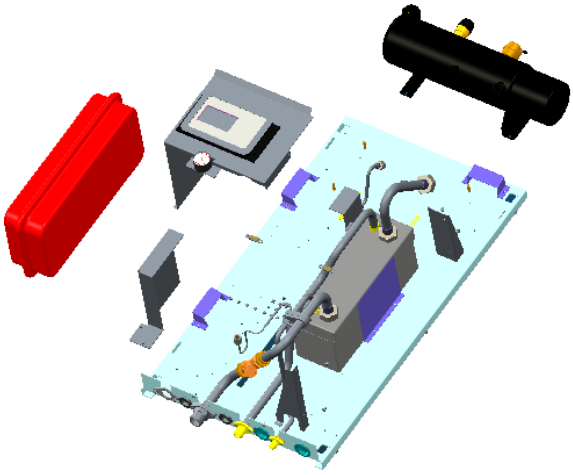 Fig.6
6) **Plate-type heat exchanger [See Fig. 7]**	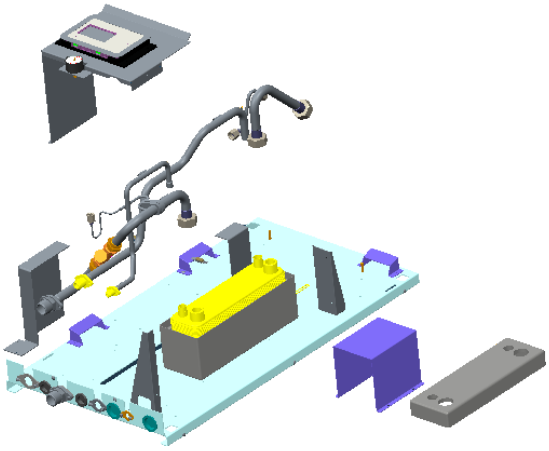 Fig. 7

5 EXPLODED VIEWS AND PART LIST

5.1 Outdoor Exploded View and Part List

- Exploded View of CH-HP6.0SINK(O),CH-HP8.0SINK(O) and CH-HP10SINK(O)

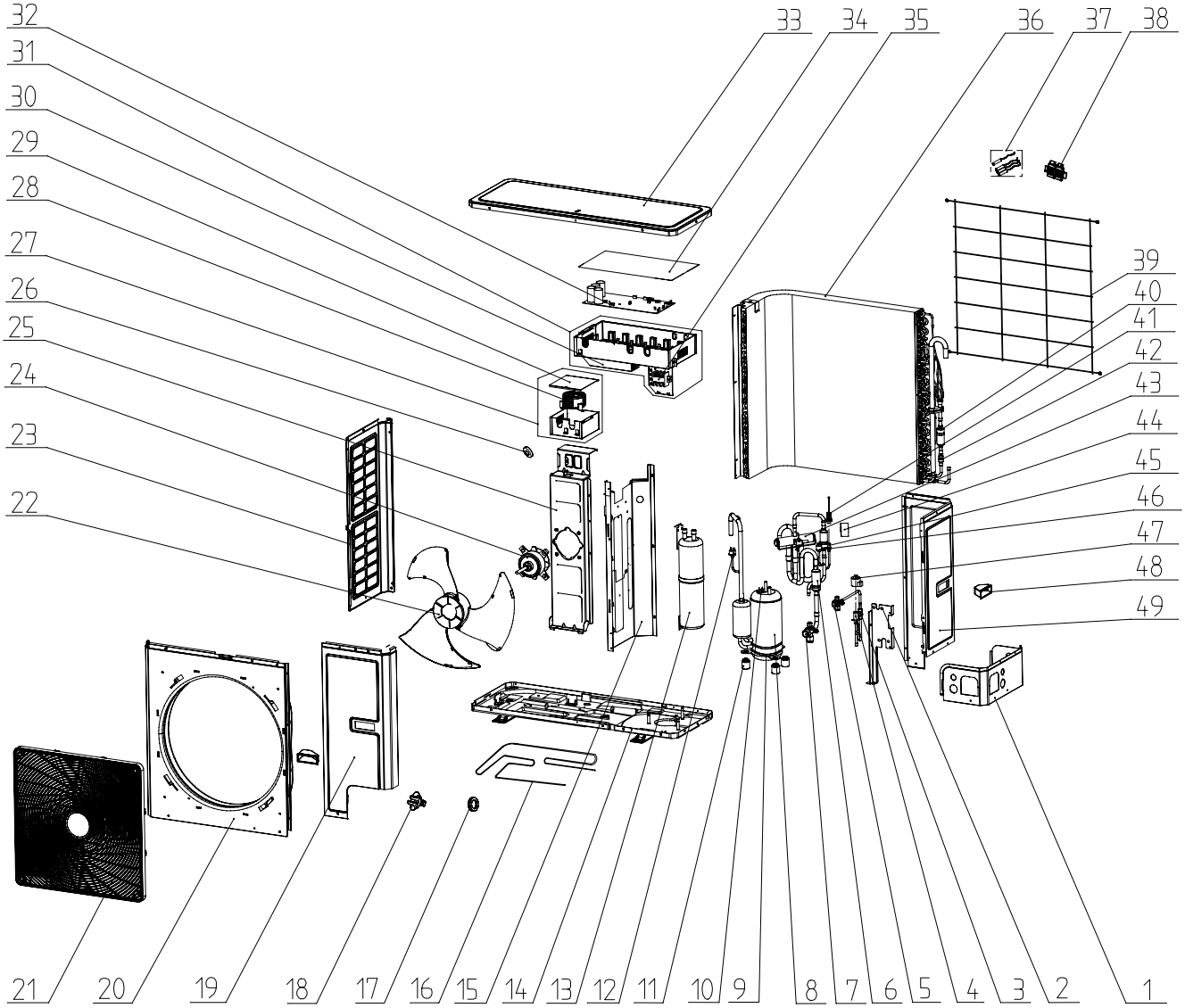

● Parts List of CH-HP6.0SINK(O) for ER010W1100, CH-HP8.0SINK(O) for ER010W1110, and CH-HP10SINK(O) for ER010W1120

No.	Name of part	Part code	Quantity
1	Right Side Plate	01314100046P	1
2	Valve Support Sub-Assy	01802800175P	1
3	Strainer	07212001	1
4	Electronic Expansion Valve	07334466 ①	1
		07135176 ②	1
5	Cut-off Valve	071302391	1
6	Strainer	07210032	1
7	Cut-off Valve	07334100016	1
8	Compressor and Fittings	00105036 ①	1
		00205275 ②	1
9	Electrical Heater	76518732	1
10	Compressor Overload Protector(External)	00185012	1
11	Compressor Gasket	76710207	3
12	Pressure Protection Switch	46020007	1
13	Gas-liquid Separator	07225015 ①	1
		07422809 ②	1
14	Clapboard Sub-assy	01242800021	1
15	Chassis Sub-assy	01192800036P	1
16	Electrical Heater (Chassis)	765100041	1
17	Drainage Hole Cap	06813401	3
18	Drainage Connecter	06123401	1
19	Front Side Plate	01314100044P	1
20	Cabinet	01514100007P	1
21	Front Grill	01574100008	1
22	Axial Flow Fan	10335014	1
23	Left Side Plate	01314100043P	1
24	Fan Motor	15702802	1
25	Motor Support Sub-Assy	01804100309	1
26	Magnetic Ring	49010109	1
27	Inductance Box Sub-assy	01392800111	1
28	PFC Inductance	43128003	1
29	Electric Box Cover	01425279	1
30	Radiator	49018112	1
31	Electric Box Assy	01392800115 ①	1
		01392800112 ②	1
32	Main Board	30227000020	1
		30227000019 ①	1
33	Coping	01264100027P ②	1
34	Electric Box Cover	01425281	1
35	Terminal Board	42011242	1
36	Condenser Assy	01122800067 ①	1
		01122800063 ②	1
37	Sensor Sub-assy	39008000080G	1
38	Sensor Support	26905202	1
39	Rear Grill	01574100010	1
40	Silencer	07245012	2
41	Sensing Device	322101032	1
42	Strainer	07212121	1
43	4-way Valve	43000338	1
44	Magnet Coil	4300040029	1
45	Nozzle for Adding Freon	06120012	1
46	Pressure Protection Switch	46020006	1
47	Electric Expand Valve Fitting	43000344	1
48	Handle	26235253	2
49	Rear Side Plate	01314100045P	1

Note:mark symbol"①"means that only is used in ER010W1100,"②" only is used in ER010W1110, ER010W1120.

● Exploded View of CH-HP12SINK(O),CH-HP14SINK(O) and CH-HP16SINK(O)

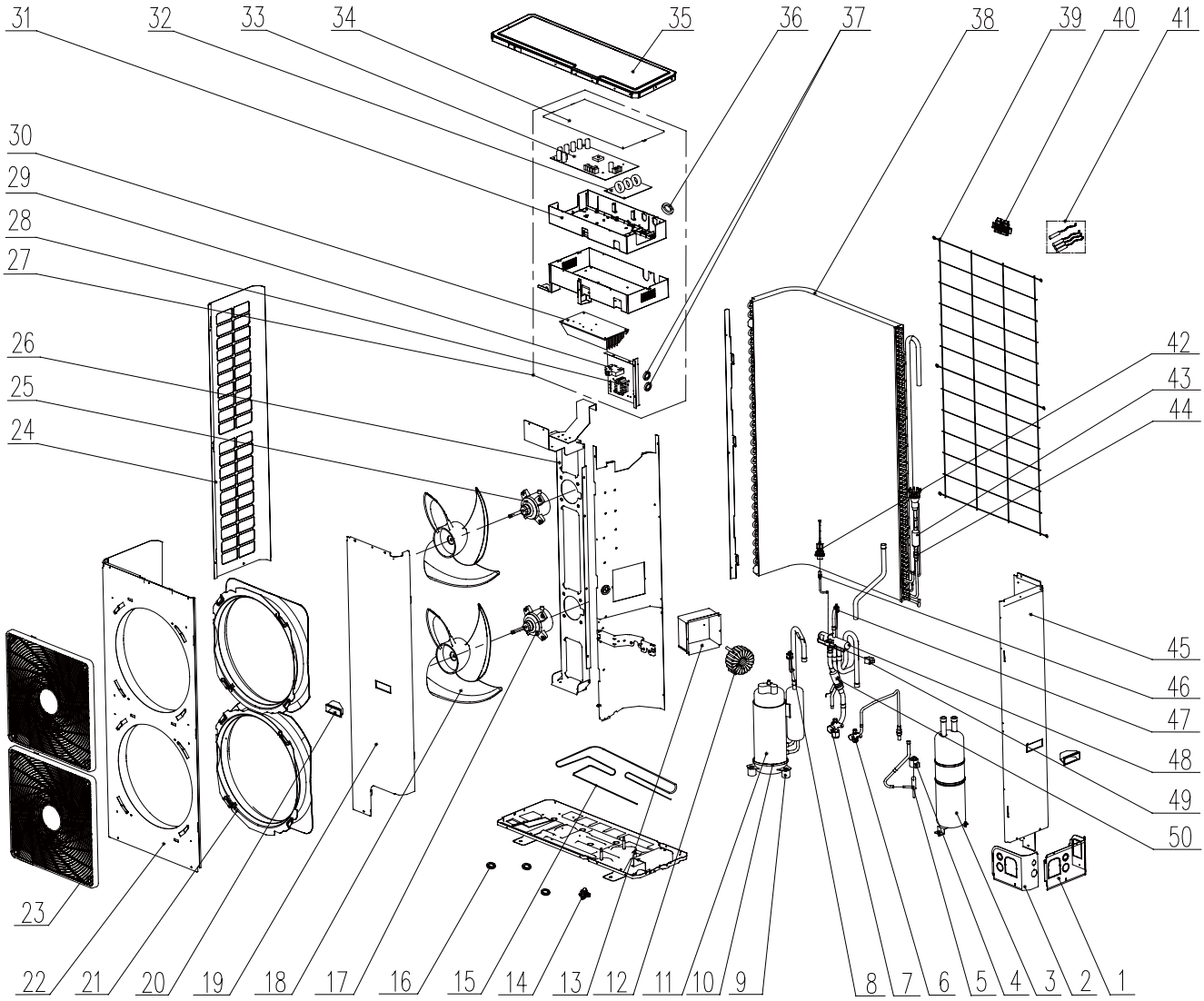

● Parts List of CH-HP12SINK(O) for ER010W1130, CH-HP14SINK(O) for ER010W1140, and CH-HP16SINK(O) for ER010W1150

No.	Name of part	Part code	Quantity
1	Right Connection Board	01344100003P	1
2	Front Connection Board	01344100002P	1
3	Gas-liquid Separator	07425216	1
4	Electric Expand Valve Fitting	4304413221	1
5	Electronic Expansion Valve	07334412	1
6	Cut off Valve	07330000002	1
7	Cut off Valve	07330000001	1
8	Pressure Protection Switch	46020007	1
9	Gasket	76815204	3
10	Electrical Heater (Compressor)	765152123	1
11	Compressor and Fittings	00205224	1
12	Inductance	43120122	1
13	Electric Inductance Box	01424173	1
14	Drainage Connecter	06123401	1
15	Electrical Heater (Chassis)	765100041	1
16	Drainage Hole Cap	06813401	3
17	Fan Motor	1570411501	1
18	Axial Flow Fan	10338731	2
19	Front Side Plate	01314100012P	1
20	Handle	26235253	2
21	Cabinet	01514100002P	1
22	Diversion Circle	10474100001	2
23	Front Grill	01575200001	2
24	Left Side Plate	01314100013P	1
25	Fan Motor	15704115	1
26	Fan Motor Support Sub-assy	01802800138	1
27	Electric Box Assy	01392800080	1
28	Terminal Board	42011242	1
29	Overcurrent Circuit Breaker	46020018	1
30	Radiator	49010007	1
31	Electric Box 1	26904131	1
32	Filter Board	30228115	1
33	Main Board	30227000018	1
34	Electric Box Cover	01262800102	1
35	Coping	01264100008P	1
36	Magnetic Ring	49010109	1
37	Magnetic Ring	49010104	2
38	Condenser Assy	01122800043	1
39	Rear Grill	01574100004	1
40	Sensor Support	26905202	1
41	Sensor Sub-assy	39008000080G	1
42	Sensor (High Pressure)	322101032	1
43	Silencer	07245436	1
44	Strainer	07212121	2
45	Rear Side Plate Sub-assy	01314100011P	1
46	Nozzle for Adding Freon	06120012	1
47	Pressure Protection Switch	46020006	1
48	4-way Valve	43000338	1
49	Magnet Coil	4300040029	1
50	Strainer	07210037	1

● Exploded View of CH-HP12SINM(O),CH-HP14SINM(O) and CH-HP16SINM(O)

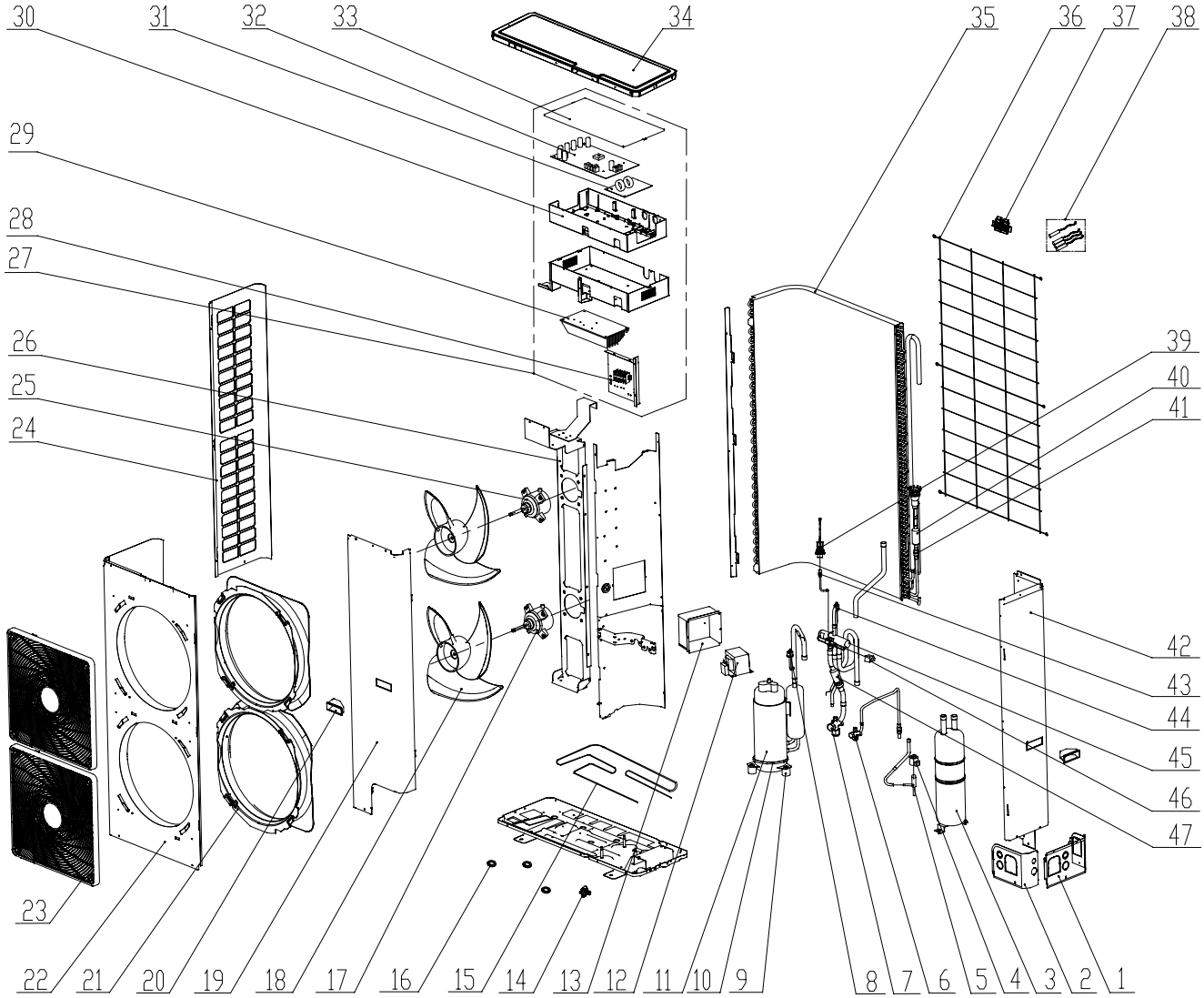

● Parts List of CH-HP12SINM(O) for ER010W1160, CH-HP14SINM(O) for ER010W1170, and CH-HP16SINM(O) for ER010W1180

No.	Name of part	Part code	Quantity
1	Right Connection Board	01344100003P	1
2	Front Connection Board	01344100002P	1
3	Gas-liquid Separator	07425216	1
4	Electric Expand Valve Fitting	4304413221	1
5	Electronic Expansion Valve	07334412	1
6	Cut off Valve	07330000002	1
7	Cut off Valve	07334100016	1
8	Pressure Protection Switch	46020007	1
9	Gasket	76815204	3
10	Electrical Heater (Compressor)	765152123	1
11	Compressor and Fittings	00204126	1
12	Reactor	43138004	1
13	Electric Inductance Box	01422835	1
14	Drainage Connecter	06123401	1
15	Electrical Heater (Chassis)	765100047	1
16	Drainage Hole Cap	06813401	3
17	Fan Motor	1570411501	1
18	Axial Flow Fan	10338731	2
19	Front Side Plate	01314100012P	1
20	Handle	26235253	2
21	Cabinet	01514100002P	1
22	Diversion Circle	10474100001	2
23	Front Grill	26904100026	2
24	Left Side Plate	01314100013P	1
25	Fan Motor	15704115	1
26	Fan Motor Support Sub-assy	01802800138	1
27	Electric Box Assy	01392800103	1
28	Terminal Board	42011223	1
29	Radiator	49018028	1
30	Electric Box 1	26904131	1
31	Filter Board	30228118	1
32	Main Board	30227000017	1
33	Electric Box Cover	01262800102	1
34	Coping	01264100008P	1
35	Condenser Assy	01122800058	1
36	Rear Grill	01574100004	1
37	Sensor Support	26905202	1
38	Sensor Sub-assy	39008000080G	1
39	Sensor (High Pressure)	322101032	1
40	Silencer	07245012	1
41	Strainer	07212121	2
42	Rear Side Plate Sub-assy	01314100011P	1
43	Nozzle for Adding Freon	06120012	1
44	Pressure Protection Switch	46020006	1
45	4-way Valve	43000338	1
46	Magnet Coil	4300040032	1
47	Strainer	07210037	1

5.2 Indoor Exploded View and Part List

● Exploded View of CH-HP6.0SINK(I),CH-HP8.0SINK(I),CH-HP10SINK(I),CH-HP12SINK(I),CH-HP14SINK(I) and CH-HP16SINK(I):

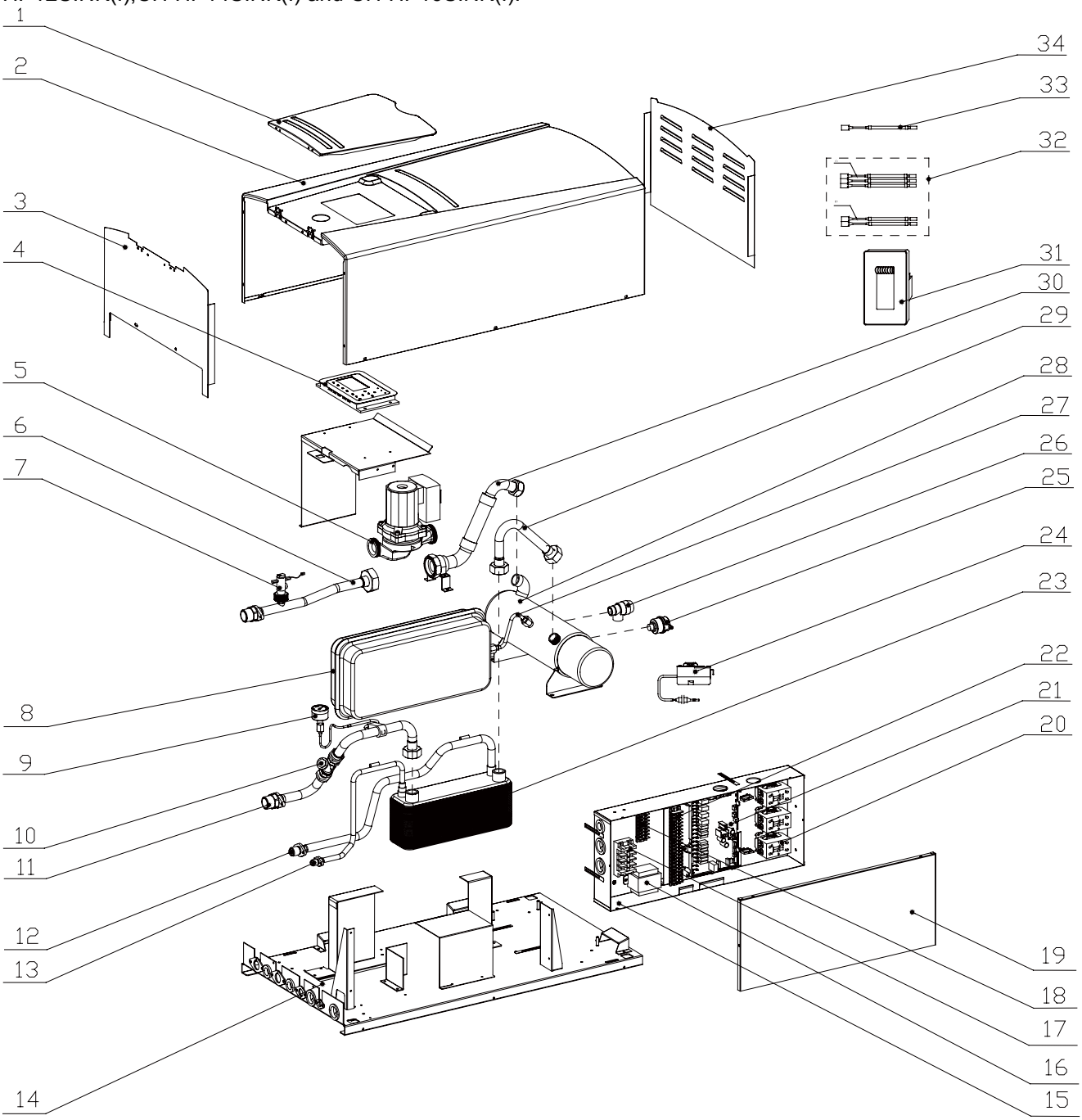

● Parts List of CH-HP6.0SINK(I) for ER010N1100, CH-HP8.0SINK(I) for ER010N1110 and CH-HP10SINK(I) for ER010N1120

No.	Name of part	Part code	Quantity
1	Front Panel Cover	01262866P	1
2	Front Panel	01542808	1
3	Bottom Cover Plate	01262876	1
4	Display Board	30292000013	1
5	Water Pump	43138221	1
6	Outlet Water Pipe Sub-Assy	04362888	1
7	Water Flow Switch Sub-Assy	45028062	1
8	Expansion Drum	07422800004	1
9	Water Pressure Gauge	49028009	1
10	Strainer	07412808	1
11	Inlet Water Pipe Sub-Assy	0426280009402 ①	1
		0426280009401 ②	1
12	Inlet Pipe Sub-Assy(Plate-type Heat Exchanger)	0432285901 ①	1
		04322855 ②	1
13	Outlet Pipe Sub-Assy(Plate-type Heat Exchanger)	0432285701 ①	1
		0432285301 ②	1
14	Chassis Sub-Assy	01192819P	1
15	Electric Box Assy	01392800113	1
16	Transformer	4311027001	1
17	Terminal Board	42011051	1
18	Terminal Board	4201120401	1
19	Electric Box Cover	01422821	1
20	Bipolar AC Contactor	44010221	3
21	Main Board	30227000015	1
22	Terminal Board	42011254	1
23	Plate-type Heat Exchanger	00902811 ①	1
		00902812 ②	1
24	Thermostat	45048006	1
25	Auto Air Outlet Valve	07108208	1
26	Relief Valve	07382814	1
27	Connection Pipe Sub-Assy(Expansion Drum)	05022800322	1
28	Electric Heater	32000003 ①	1
		32102802 ②	1
29	Inlet Water Pipe Sub-Assy(Electric Heater)	0426280009302 ①	1
		0426280009301 ②	1
30	Outlet Water Pipe(Electric Heater)	04362917	1
31	Receiver Board	30261014	1
32	Temperature Sensor Sub-Assy	39008051G	1
33	Temperature Sensor	39000283G	1
34	Top Cover Plate	01262875	1

Note:mark symbol"①"means that only is used in ER010N1100,"②" only is used in ER010N1110, ER010N1120.

● Parts List of CH-HP12SINK(I) for ER010N1130, CH-HP14SINK(I) for ER010N1140 and CH-HP16SINK(I) for ER010N1150

No.	Name of part	Part code	Quantity
1	Front Panel Cover	01262866P	1
2	Front Panel	01542808	1
3	Bottom Cover Plate	01262876	1
4	Display Board	30292000013	1
5	Water Pump	43138221	1
6	Outlet Water Pipe Sub-Assy	04362888	1
7	Water Flow Switch Sub-Assy	45028062	1
8	Expansion Drum	07422800004	1
9	Water Pressure Gauge	49028009	1
10	Strainer	07412808	1
11	Inlet Water Pipe Sub-Assy	04262800094	1
12	Inlet Pipe Sub-Assy(Plate-type Heat Exchanger)	04222800031	1
13	Outlet Pipe Sub-Assy(Plate-type Heat Exchanger)	04222800032	1
14	Chassis Sub-Assy	01192819P	1
15	Electric Box Assy	01392800079	1
16	Transformer	4311027001	1
17	Terminal Board	42011051	1
18	Terminal Board	4201120401	1
19	Electric Box Cover	01422821	1
20	Bipolar AC Contactor	44010221	3
21	Main Board	30227000015	1
22	Terminal Board	42011254	1
23	Plate-type Heat Exchanger	00902800030	1
24	Thermostat	45048006	1
25	Auto Air Outlet Valve	07108208	1
26	Relief Valve	07382814	1
27	Connection Pipe Sub-Assy(Expansion Drum)	05022800322	1
28	Electric Heater	32102802	1
29	Inlet Water Pipe Sub-Assy(Electric Heater)	04262800093	1
30	Outlet Water Pipe(Electric Heater)	04362917	1
31	Receiver Board	30261014	1
32	Temperature Sensor Sub-Assy	39008051G	1
33	Temperature Sensor	39000283G	1
34	Top Cover Plate	01262875	1

● Exploded View of CH-HP12SINM(I),CH-HP14SINM(I) and CH-HP16SINM(I):

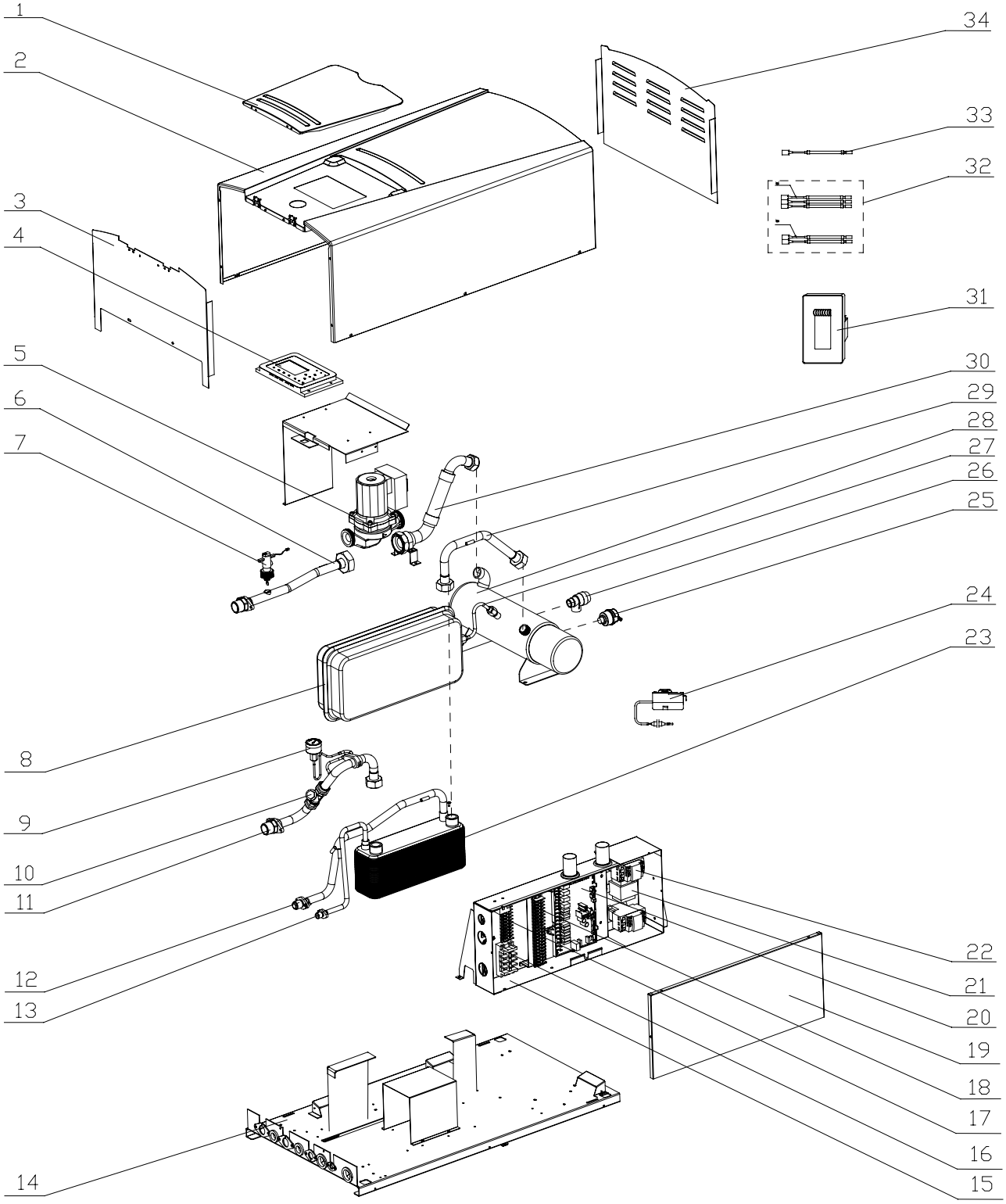

● Parts List of CH-HP12SINM(I) for ER010N1160, CH-HP14SINM(I) for ER010N1170 and CH-HP16SINM(I) for ER010N1180

No.	Name of part	Part code	Quantity
1	Front Panel Cover	01262866P	1
2	Front Panel	01542808	1
3	Bottom Cover Plate	01262876	1
4	Display Board	30292000013	1
5	Water Pump	43138221	1
6	Outlet Water Pipe Sub-Assy	04362888	1
7	Water Flow Switch Sub-Assy	45028062	1
8	Expansion Drum	07422800004	1
9	Water Pressure Gauge	49028009	1
10	Strainer	07412808	1
11	Inlet Water Pipe Sub-Assy	04262800137	1
12	Inlet Pipe Sub-Assy(Plate-type Heat Exchanger)	04222800091	1
13	Connection Pipe Sub-assy(Plate-type Heat Exchanger Outlet Pipe)	05022800444	1
14	Chassis Sub-Assy	01192819P	1
15	Electric Box Assy	01392800105	1
16	Terminal Board	42011051	1
17	Terminal Board	420102511	1
18	Terminal Board	42011254	1
19	Electric Box Cover	01422821	1
20	Main Board	30227000015	1
21	Transformer	4311027001	1
22	AC Contactor	44010232	2
23	Plate-type Heat Exchanger	00902800030	1
24	Thermostat	45048006	1
25	Auto Air Outlet Valve	07108208	1
26	Relief Valve	07382814	1
27	Connection Pipe Sub-Assy(Expansion Drum)	05022800322	1
28	Electric Heater	32000004	1
29	Inlet Water Pipe Sub-Assy(Electric Heater)	04262800138	1
30	Outlet Water Pipe(Electric Heater)	04362917	1
31	Receiver Board	30261014	1
32	Temperature Sensor Sub-Assy	39008051G	1
33	Temperature Sensor	39000283G	1
34	Top Cover Plate	01262875	1

5.3 Water Tank Exploded View and Part List

- Exploded View of WT200FH3EK, WT200FH3EM, WT300FH3EK, WT300FH3EM :

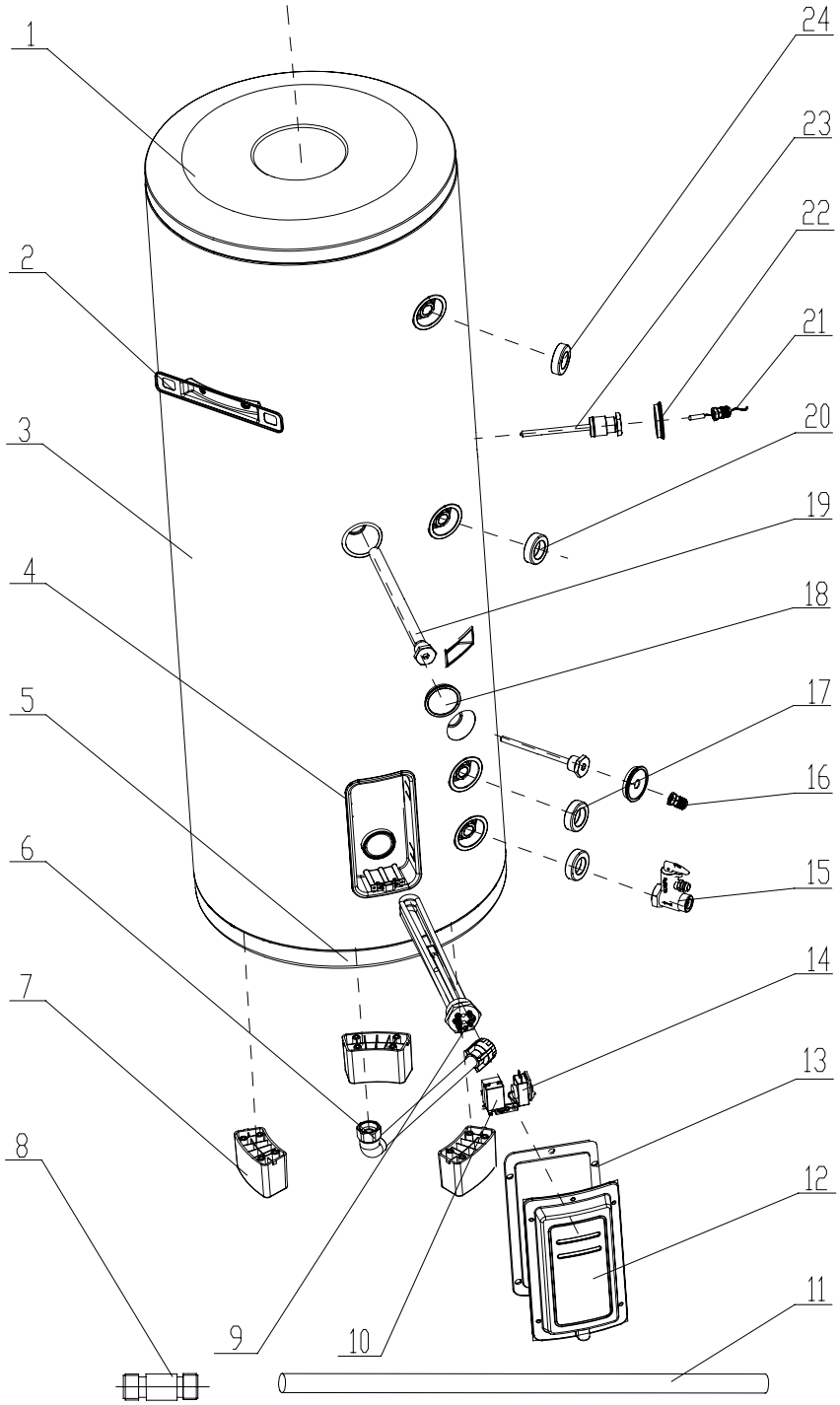

● Parts List of WT200FH3EK for ER20000160

No.	Name of part	Part code	Quantity
1	Bottom Cover Plate	01262801P	1
2	Fixation Bracket (Outside)	01802819P	1
3	Body Of Outdoor Unit	0151283301P	1
4	Electric Box Assy	01392865	1
5	Bottom Cover Plate	01262806P	1
6	Drainage Pipe Sub-Assy	04362821	1
7	Water Tank Base	01892825	3
8	Water Pipe Joint (accessory)	06652838	1
9	Electric Heater	32110008	1
10	Thermostat	45048005	1
11	Drainage hose	05230012	1
12	Electric Box Cover	26902805	1
13	Gasket	75042802	1
14	Thermostat	45048003	1
15	Relief Valve	07382801	1
16	Cable Cross Loop	765100267	2
17	Toggle Switch Sheath	26902823	1
18	Gasket	7041280401	1
19	Magnesium Sub-Assy	04162801	1
20	Toggle Switch Sheath	2690282301	1
21	Temperature Sensor	3900028302	1
22	Gasket	70412804	2
23	Temp Sensor Pipe Sub-Assy	04162802	2
24	Toggle Switch Sheath	26242801	2

● Parts List of WT200FH3EM for ER20000240

No.	Name of part	Part code	Quantity
1	Bottom Cover Plate	01262801P	1
2	Fixation Bracket (Outside)	01802819P	1
3	Body Of Outdoor Unit	0151283301P	1
4	Electric Box Assy	01392885	1
5	Bottom Cover Plate	01262806P	1
6	Drainage Pipe Sub-Assy	04362821	1
7	Water Tank Base	01892825	3
8	Water Pipe Joint (accessory)	06652838	1
9	Electric Heater	32110009	1
10	Thermostat	45048016	1
11	Drainage hose	05230012	1
12	Electric Box Cover	26902805	1
13	Gasket	75042802	1
14	Thermostat	45048003	1
15	Relief Valve	07382801	1
16	Cable Cross Loop	765100267	2
17	Toggle Switch Sheath	26902823	1
18	Gasket	7041280401	1
19	Magnesium Sub-Assy	04162801	1
20	Toggle Switch Sheath	2690282301	1
21	Temperature Sensor	3900028302	1
22	Gasket	70412804	2
23	Temp Sensor Pipe Sub-Assy	04162802	2
24	Toggle Switch Sheath	26242801	2

● Parts List of WT300FH3EK for ER20000180

No.	Name of part	Part code	Quantity
1	Bottom Cover Plate	0126280102P	1
2	Fixation Bracket (Outside)	01802833P	1
3	Body Of Outdoor Unit	0151283401P	1
4	Electric Box Assy	01392865	1
5	Bottom Cover Plate	0126280602P	1
6	Drainage Pipe Sub-Assy	04362821	1
7	Water Tank Base	01892825	3
8	Water Pipe Joint (accessory)	06652838	1
9	Electric Heater	32110008	1
10	Thermostat	45048005	1
11	Drainage hose	05230012	1
12	Electric Box Cover	2690280501	1
13	Gasket	75042802	1
14	Thermostat	45048003	1
15	Relief Valve	07382801	1
16	Cable Cross Loop	765100267	2
17	Toggle Switch Sheath	26902823	1
18	Gasket	7041280401	1
19	Magnesium Sub-Assy	04162801	1
20	Toggle Switch Sheath	2690282301	1
21	Temperature Sensor	3900028302	1
22	Gasket	70412804	2
23	Temp Sensor Pipe Sub-Assy	04162802	2
24	Toggle Switch Sheath	26242801	2

● Parts List of WT300FH3EM for ER20000250

No.	Name of part	Part code	Quantity
1	Bottom Cover Plate	0126280102P	1
2	Fixation Bracket (Outside)	01802833P	1
3	Body Of Outdoor Unit	0151283401P	1
4	Electric Box Assy	01392885	1
5	Bottom Cover Plate	0126280602P	1
6	Drainage Pipe Sub-Assy	04362821	1
7	Water Tank Base	01892825	3
8	Water Pipe Joint (accessory)	06652838	1
9	Electric Heater	32110009	1
10	Thermostat	45048016	1
11	Drainage hose	05230012	1
12	Electric Box Cover	2690280501	1
13	Gasket	75042802	1
14	Thermostat	45048003	1
15	Relief Valve	07382801	1
16	Cable Cross Loop	765100267	2
17	Toggle Switch Sheath	26902823	1
18	Gasket	7041280401	1
19	Magnesium Sub-Assy	04162801	1
20	Toggle Switch Sheath	2690282301	1
21	Temperature Sensor	3900028302	1
22	Gasket	70412804	2
23	Temp Sensor Pipe Sub-Assy	04162802	2
24	Toggle Switch Sheath	26242801	2

- Exploded View of WT2002FH3EK, WT2002FH3EM, WT3002FH3EK, WT3002FH3EM:

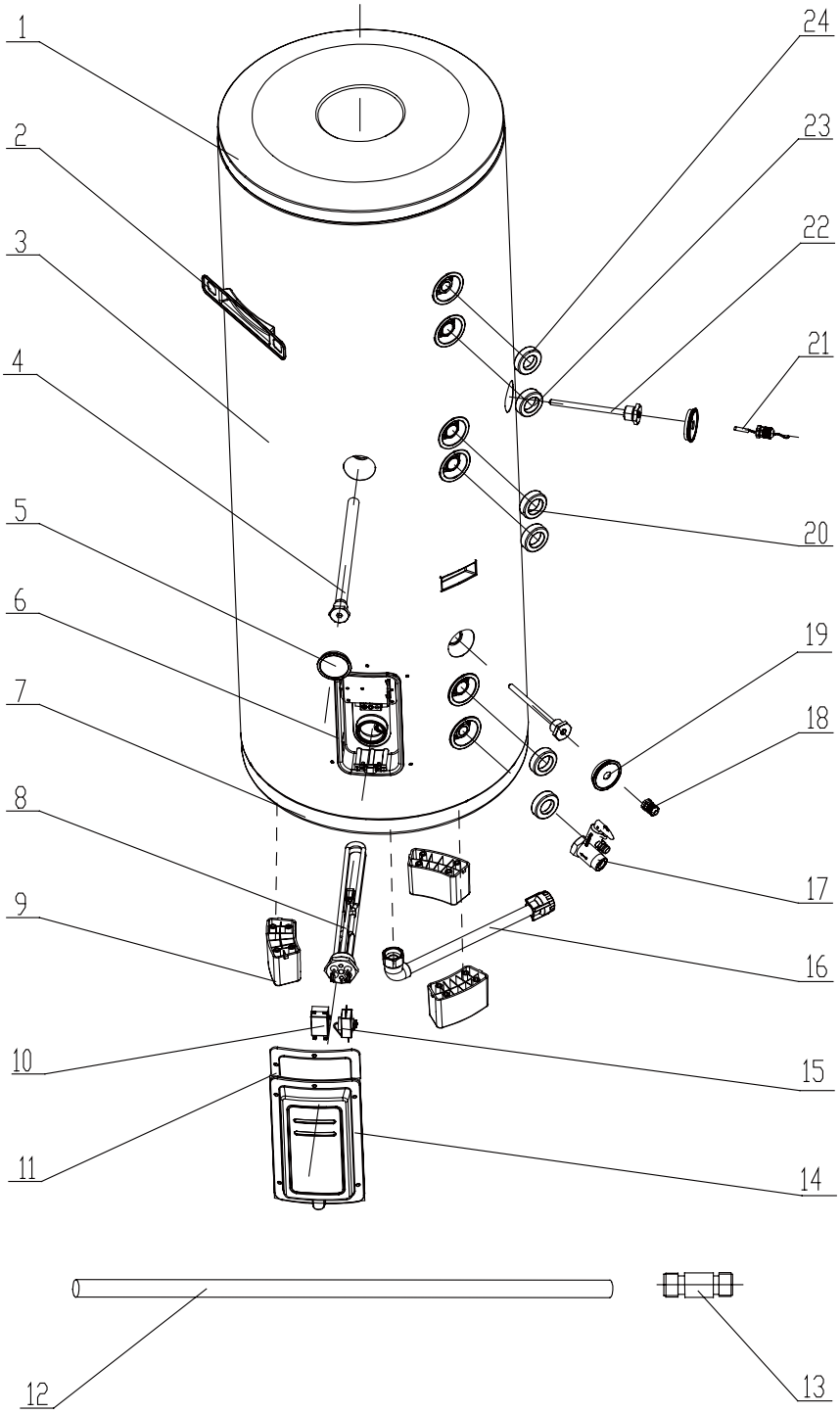

● Parts List of WT2002FH3EK for ER20000170

No.	Name of part	Part code	Quantity
1	Bottom Cover Plate	01262801P	1
2	Fixation Bracket (Outside)	01802819P	1
3	Body Of Outdoor Unit	01512833P	1
4	Magnesium Sub-Assy	04162801	1
5	Gasket	7041280401	1
6	Electric Box Assy	01392865	1
7	Bottom Cover Plate	01262806P	1
8	Electric heater	32110008	1
9	Water Tank Base	01892825	3
10	Thermostat	45048005	1
11	Gasket	75042802	1
12	Drainage hose	05230012	1
13	Water Pipe Joint (accessory)	06652838	1
14	Electric Box Cover	26902805	1
15	Thermostat	45048003	1
16	Drainage Pipe Sub-Assy	04362821	1
17	Relief Valve	07382801	1
18	Cable Cross Loop	765100267	2
19	Gasket	70412804	2
20	Toggle Switch Sheath	26902823	2
21	Temperature Sensor	3900028302	1
22	Temp Sensor Pipe Sub-Assy	04162802	2
23	Toggle Switch Sheath	2690282301	2
24	Toggle Switch Sheath	26242801	2

● Parts List of WT2002FH3EM for ER20000260

No.	Name of part	Part code	Quantity
1	Bottom Cover Plate	01262801P	1
2	Fixation Bracket (Outside)	01802819P	1
3	Body Of Outdoor Unit	01512833P	1
4	Magnesium Sub-Assy	04162801	1
5	Gasket	7041280401	1
6	Electric Box Assy	01392885	1
7	Bottom Cover Plate	01262806P	1
8	Electric heater	32110009	1
9	Water Tank Base	01892825	3
10	Thermostat	45048016	1
11	Gasket	75042802	1
12	Drainage hose	05230012	1
13	Water Pipe Joint (accessory)	06652838	1
14	Electric Box Cover	26902805	1
15	Thermostat	45048003	1
16	Drainage Pipe Sub-Assy	04362821	1
17	Relief Valve	07382801	1
18	Cable Cross Loop	765100267	2
19	Gasket	70412804	2
20	Toggle Switch Sheath	26902823	2
21	Temperature Sensor	3900028302	1
22	Temp Sensor Pipe Sub-Assy	04162802	2
23	Toggle Switch Sheath	2690282301	2
24	Toggle Switch Sheath	26242801	2

● Parts List of WT3002FH3EK for ER20000190

No.	Name of part	Part code	Quantity
1	Bottom Cover Plate	0126280102P	1
2	Fixation Bracket (Outside)	01802833P	1
3	Body Of Outdoor Unit	01512834P	1
4	Magnesium Sub-Assy	04162801	1
5	Gasket	7041280401	1
6	Electric Box Assy	01392865	1
7	Bottom Cover Plate	0126280602P	1
8	Electric heater	32110008	1
9	Water Tank Base	01892825	3
10	Thermostat	45048005	1
11	Gasket	75042802	1
12	Drainage hose	05230012	1
13	Water Pipe Joint (accessory)	06652838	1
14	Electric Box Cover	26902805	1
15	Thermostat	45048003	1
16	Drainage Pipe Sub-Assy	04362821	1
17	Relief Valve	07382801	1
18	Cable Cross Loop	765100267	2
19	Gasket	70412804	2
20	Toggle Switch Sheath	26902823	2
21	Temperature Sensor	3900028302	1
22	Temp Sensor Pipe Sub-Assy	04162802	2
23	Toggle Switch Sheath	2690282301	2
24	Toggle Switch Sheath	26242801	2

● Parts List of WT3002FH3EM for ER20000270

No.	Name of part	Part code	Quantity
1	Bottom Cover Plate	0126280102P	1
2	Fixation Bracket (Outside)	01802833P	1
3	Body Of Outdoor Unit	01512834P	1
4	Magnesium Sub-Assy	04162801	1
5	Gasket	7041280401	1
6	Electric Box Assy	01392885	1
7	Bottom Cover Plate	0126280602P	1
8	Electric heater	32110009	1
9	Water Tank Base	01892825	3
10	Thermostat	45048016	1
11	Gasket	75042802	1
12	Drainage hose	05230012	1
13	Water Pipe Joint (accessory)	06652838	1
14	Electric Box Cover	2690280501	1
15	Thermostat	45048003	1
16	Drainage Pipe Sub-Assy	04362821	1
17	Relief Valve	07382801	1
18	Cable Cross Loop	765100267	2
19	Gasket	70412804	2
20	Toggle Switch Sheath	26902823	2
21	Temperature Sensor	3900028302	1
22	Temp Sensor Pipe Sub-Assy	04162802	2
23	Toggle Switch Sheath	2690282301	2
24	Toggle Switch Sheath	26242801	2

Designed by Cooper&Hunter International Corporation, Oregon, USA
www.cooperandhunter.com
E-mail: info@cooperandhunter.com